Privia

ES

English

Español

PX-A800

USER'S GUIDE
GUÍA DEL USUARIO

Please keep all information for future reference.
Guarde toda información para tener como referencia futura.

Safety Precautions
Before trying to use the Digital Piano, be sure to read the separate "Safety Precautions".

Precauciones de seguridad
Antes de intentar usar el piano, asegúrese de leer las "Precauciones de seguridad" separadas.

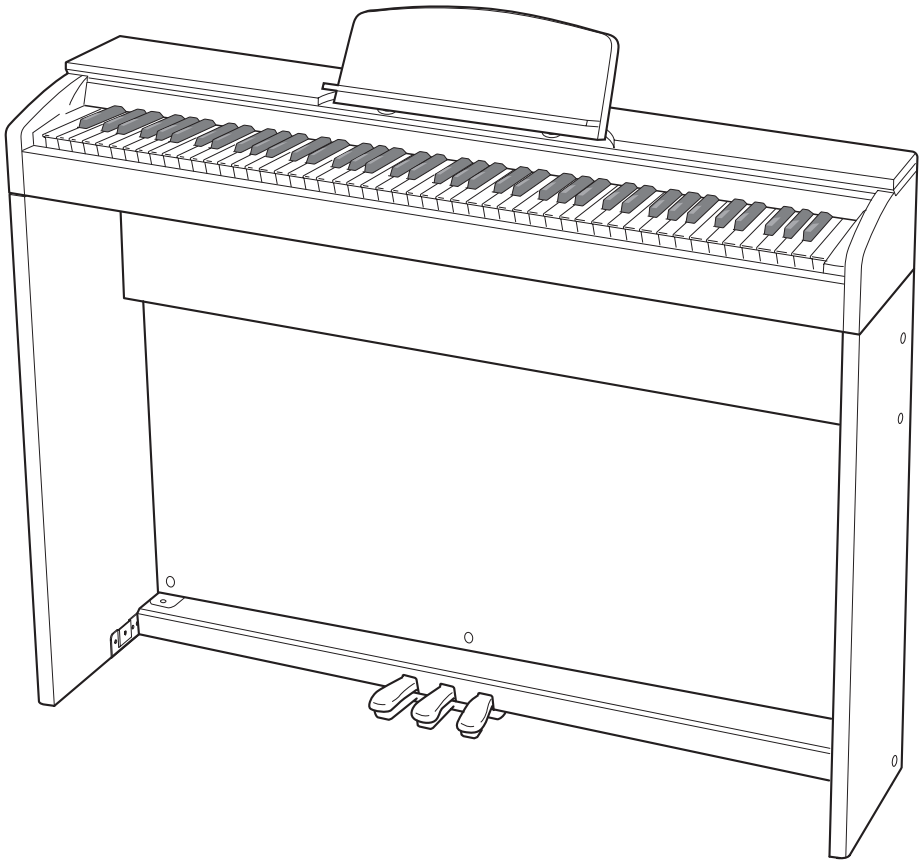

PXA800-ES-1A

CASIO®

TO REDUCE THE RISK OF FIRE OR ELECTRIC SHOCK, REFER SERVICING TO QUALIFIED SERVICE PERSONNEL.

IMPORTANT SAFETY INSTRUCTIONS

1. Read these instructions.
2. Keep these instructions.
3. Heed all warnings.
4. Follow all instructions.
5. Do not use this apparatus near water.
6. Clean only with dry cloth.
7. Do not block any ventilation openings. Install in accordance with the manufacturer's instructions.
8. Do not install near any heat sources such as radiators, heat registers, stoves, or other apparatus (including amplifiers) that produce heat.
9. Do not defeat the safety purpose of the polarized or grounding-type plug. A polarized plug has two blades with one wider than the other. A grounding type plug has two blades and a third grounding prong. The wide blade or the third prong are provided for your safety. If the provided plug does not fit into your outlet, consult an electrician for replacement of the obsolete outlet.
10. Protect the power cord from being walked on or pinched particularly at plugs, convenience receptacles, and the point where they exit from the apparatus.
11. Only use attachments/accessories specified by the manufacturer.
12. Use only with the cart, stand, tripod, bracket, or table specified by the manufacturer, or sold with the apparatus. When a cart is used, use caution when moving the cart/apparatus combination to avoid injury from tip-over.

13. Unplug this apparatus during lightning storms or when unused for long periods of time.
14. Refer all servicing to qualified service personnel. Servicing is required when the apparatus has been damaged in any way, such as power-supply cord or plug is damaged, liquid has been spilled or objects have fallen into the apparatus, the apparatus has been exposed to rain or moisture, does not operate normally, or has been dropped.

The apparatus shall not be exposed to dripping or splashing and that no objects filled with liquids, such as vases, shall be placed on the apparatus.

The power indicator being unlit does not mean the apparatus is completely disconnected from the MAINS.
When you need to have the apparatus completely disconnected from the MAINS, you must unplug the power cord. For that purpose, locate the apparatus in a way that secures easy access to the power cord.

NOTICE

This equipment has been tested and found to comply with the limits for a Class B digital device, pursuant to Part 15 of the FCC Rules. These limits are designed to provide reasonable protection against harmful interference in a residential installation. This equipment generates, uses and can radiate radio frequency energy and, if not installed and used in accordance with the instructions, may cause harmful interference to radio communications. However, there is no guarantee that interference will not occur in a particular installation. If this equipment does cause harmful interference to radio or television reception, which can be determined by turning the equipment off and on, the user is encouraged to try to correct the interference by one or more of the following measures:

- Reorient or relocate the receiving antenna.
- Increase the separation between the equipment and receiver.
- Connect the equipment into an outlet on a circuit different from that to which the receiver is connected.
- Consult the dealer or an experienced radio/TV technician for help.

FCC WARNING

Changes or modifications not expressly approved by the party responsible for compliance could void the user's authority to operate the equipment.

Declaration of Conformity

Model Number: PX-A800
Trade Name: CASIO COMPUTER CO., LTD.
Responsible party: CASIO AMERICA, INC.
Address: 570 MT. PLEASANT AVENUE, DOVER, NEW JERSEY 07801
Telephone number: 973-361-5400
This device complies with Part 15 of the FCC Rules, Operation is subject to the following two conditions:
(1) This device may not cause harmful interference, and (2) this device must accept any interference received, including interference that may cause undesired operation.

Important!

Please note the following important information before using this product.

- Before using the AD-E24250LW Adaptor to power the unit, be sure to check the AC Adaptor for any damage first. Carefully check the power cord for breakage, cuts, exposed wire and other serious damage. Never let children use an AC adaptor that is seriously damaged.
- The product is not intended for children under 3 years.
- Use only CASIO AD-E24250LW adaptor.
- The AC adaptor is not a toy.
- Be sure to disconnect the AC adaptor before cleaning the product.

This mark applies in EU countries only.

Declaration of Conformity According to EU Directive

CE

Manufacturer:
CASIO COMPUTER CO., LTD.
6-2, Hon-machi 1-chome, Shibuya-ku, Tokyo 151-8543, Japan

Responsible within the European Union:
CASIO EUROPE GmbH
Casio-Platz 1, 22848 Norderstedt, Germany

Contents

Getting Ready E-39
Assembling the Stand E-39
To connect the cable E-43
To install the music stand E-43
Opening and Closing the Piano Lid E-44
Power Outlet E-45
Connecting Headphones E-45
Connecting Audio Equipment or an Amplifier E-46
Bundled and Optional Accessories E-46

General Guide E-2
FUNCTION Button E-3
Saving Settings and Using Operation Lock E-3

Power Outlet E-4
Turning Power On or Off E-4

Playing with Different Tones E-5
Selecting and Playing a Tone E-5
Adjusting Acoustic Piano Sound Characteristics E-7
Layering Two Tones E-7
Using Effects E-8
Using the Digital Piano's Pedals E-9
Using the Metronome E-10
Playing a Piano Duet E-11

Playing Back a Song E-12
Playing Back All of the Built-in Songs E-12
Playing Back a Specific Music Library Song E-13
Practicing with a Music Library Song E-13
Playing Back Audio Data Stored on a USB Flash Drive E-14

Recording and Playback E-15
Recording to Built-in Song Memory (Song Recorder) E-15
Using the **SONG RECORDER** Button E-16
Recording to a USB Flash Drive (Audio Recorder) E-18

Configuring Settings with the Keyboard E-21
To configure settings with the keyboard E-21
Keyboard Keys Used for Configuring Settings E-22
Parameter List E-23
Hall simulator E-23
Tone selection E-23
Chorus E-23
Brilliance E-23
Layer balance E-23
Song select (SONG SELECT) E-23
Song volume E-23
Metronome beat (METRONOME BEAT) E-23
Metronome volume E-23
Keyboard key (Transpose) E-24
Keyboard tuning (Tuning) E-24
Octave shift E-24
Temperament E-24
Temperament select E-24
Temperament Base note E-24
Temperament Base note select E-24
Touch response (TOUCH RESPONSE) E-24
USB device mode E-24
Send channel E-24
Local control E-24
Operation tone E-25
Back up E-25
Operation lock E-25
USB flash drive mode E-25
Format E-25
Save E-25
Load E-25
Delete E-25

USB Flash Drive E-26
Storing Standard Audio Data (WAV Files) to a USB Flash Drive E-26
Connecting a USB Flash Drive to and Detaching It from the Digital Piano E-27
Formatting a USB Flash Drive E-28
Saving a Recorded Song to a USB Flash Drive E-29
Loading Song Data from a USB Flash Drive into Digital Piano Memory E-30
Deleting Data from a USB Flash Drive E-31
Simple Play Back of a Song on a USB Flash Drive E-32
Error Indicators E-33

Connecting to a Computer E-35
Minimum Computer System Requirements E-35
Connecting the Digital Piano to Your Computer E-35
Using MIDI E-36
Transferring Song Data with a Computer E-36

Reference E-47
Troubleshooting E-47
Product Specifications E-48
Operating Precautions E-49

Appendix A-1
Tone List A-1
Song List A-1

MIDI Implementation Chart

Company and product names used in this manual may be registered trademarks of others.

English

General Guide

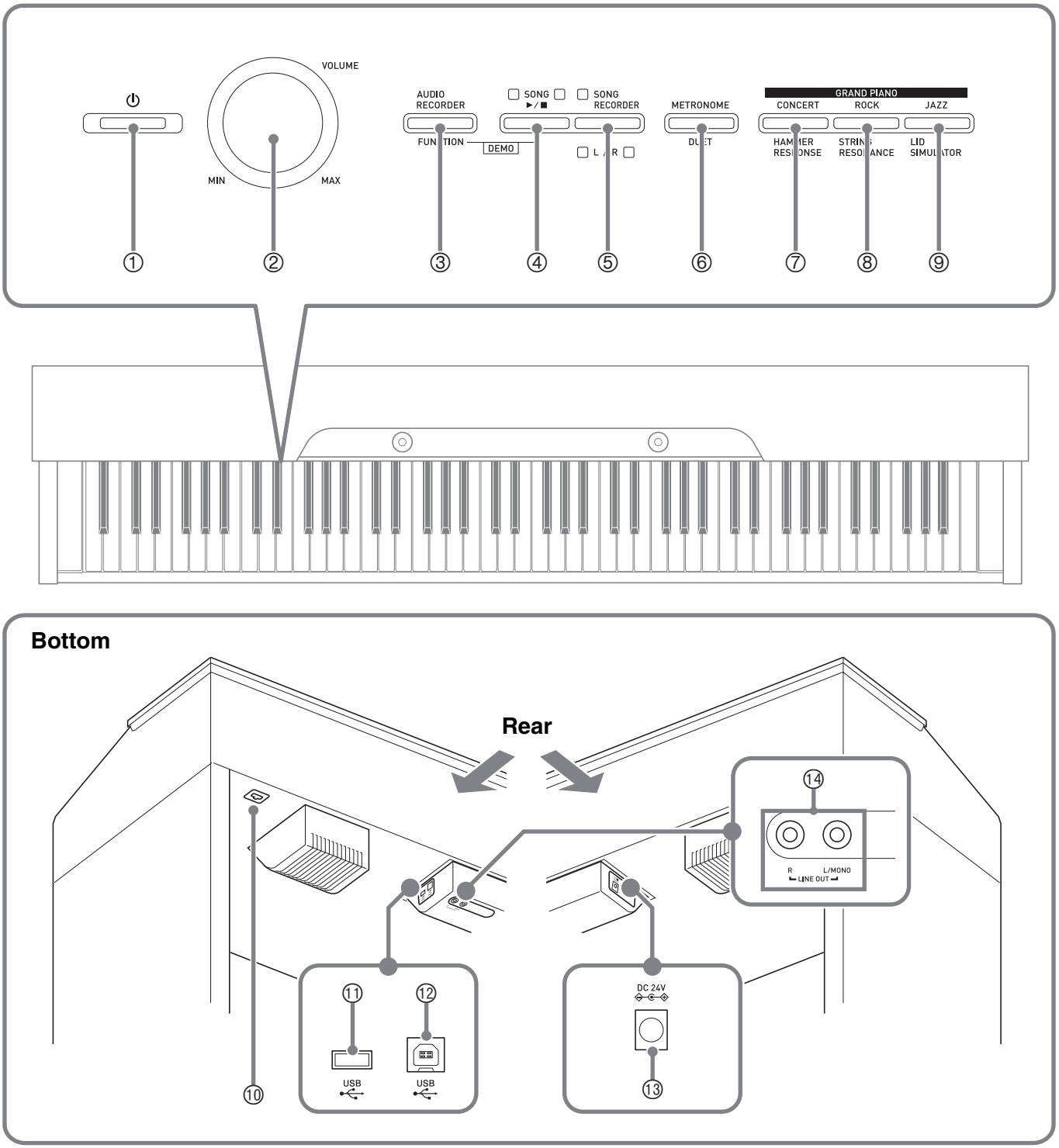

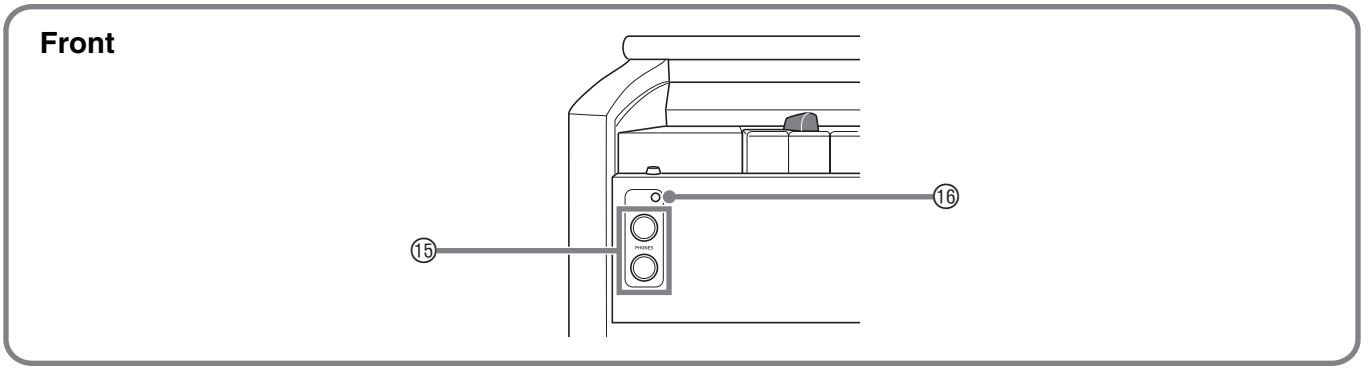

⚠**CAUTION**

- Make sure that the cover is fully open whenever you are playing on the keyboard. A partially open cover can suddenly close unexpectedly and pinch your fingers.

NOTE

- The names shown here are always indicated in bold when they appear within the text of this manual.

① ⏻ (**POWER**) button

② **VOLUME** controller

③ **AUDIO RECORDER, FUNCTION** button

④ **SONG** ▶/■ button

⑤ **SONG RECORDER** (**L/R**) button

⑥ **METRONOME, DUET** button

⑦ **GRAND PIANO** (**CONCERT**), **HAMMER RESPONSE** button

⑧ **GRAND PIANO** (**ROCK**), **STRING RESONANCE** button

⑨ **GRAND PIANO** (**JAZZ**), **LID SIMULATOR** button

⑩ Pedal connector

⑪ **USB** flash drive port

⑫ **USB** port

⑬ **DC 24V** terminal

⑭ **LINE OUT R, L/MONO** jacks

⑮ **PHONES** jacks

⑯ Power lamp

FUNCTION Button

The **FUNCTION** button is used when configuring a variety of different Digital Piano settings. The following are **FUNCTION** button basics.

- To change a setting, hold down the **FUNCTION** button as you press the keyboard key that is assigned the setting you want to select.

  Example: "To select a tone" on page E-5

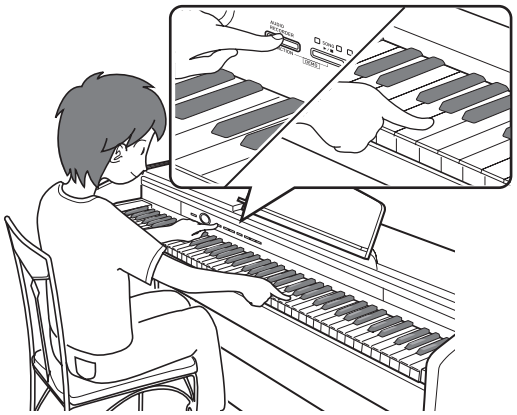

NOTE

- For details about operations and settings, see "Configuring Settings with the Keyboard" on page E-21.

Saving Settings and Using Operation Lock

Your Digital Piano lets you save its current settings and lock its buttons to protect against operation errors. For details, see "Parameter List" on pages E-23 - E-25.

Power Outlet

After you finish assembling the stand, turn on the Digital Piano. For details, see "Getting Ready" on page E-39.

Turning Power On or Off

1. Press the ⏻ **(POWER)** button to turn on Digital Piano power.

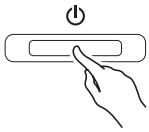

- This causes the ⏻ **(POWER)** button to light.
- When you turn on the Digital Piano, it performs a power up operation in order to initialize its system. During system initialization the tone button lamps cycle on and off in the sequence for about five seconds to let you know that system initialization is in progress.

2. To turn off the Digital Piano, hold down the ⏻ **(POWER)** button until its light goes out.

NOTE

- Pressing the ⏻ **(POWER)** button to turn off power actually puts the Digital Piano into a standby state. Minute amounts of current continue to flow within the Digital Piano in the standby state. If you do not plan to use the Digital Piano for a long time or if there is a lightning storm in your area, be sure to unplug the AC adaptor from the power outlet.

Auto Power Off

This Digital Piano is designed to turn off automatically to avoid wasting power after no operation is performed for a preset amount of time. The Auto Power Off trigger time is about four hours.

- You also can use the procedure below to temporarily suspend Auto Power Off.

■ To disable Auto Power Off

1. While the Digital Piano is turned on, press the ⏻ **(POWER)** button to turn it off.

2. While holding down the **FUNCTION** button, press the ⏻ **(POWER)** button to turn on the Digital Piano.

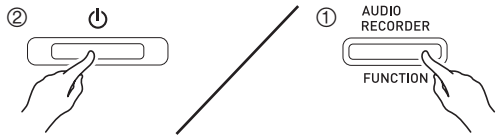

- Auto Power Off will be disabled at this time.

NOTE

- Turning off the Digital Piano after performing the above steps will re-enable Auto Power Off.

Playing with Different Tones

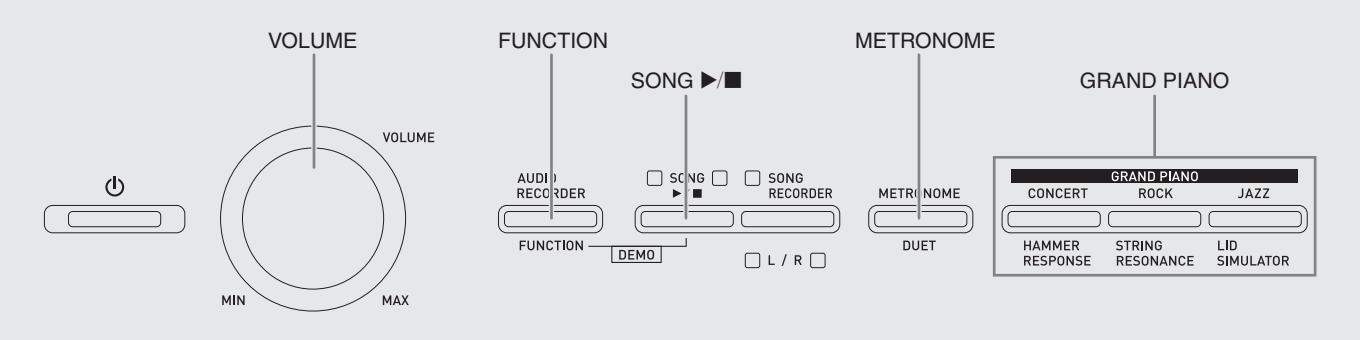

Selecting and Playing a Tone

The Digital Piano comes with 18 built-in tones.

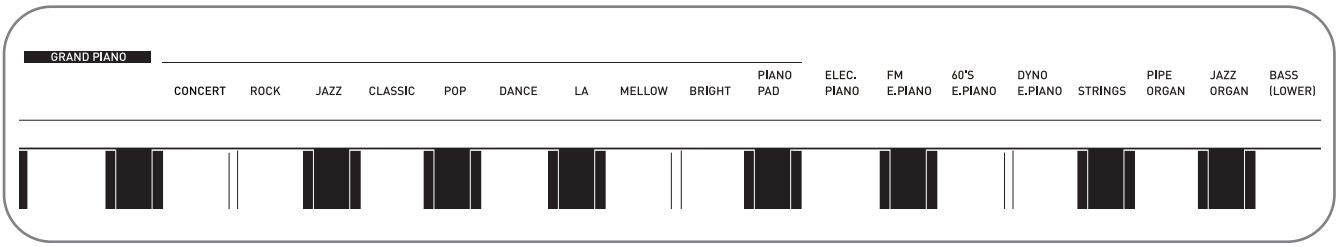

- The names of the tones are marked above the keyboard keys to which they are assigned.

To select a tone

1. Select the tone you want.

- To select GRAND PIANO (CONCERT, ROCK or JAZZ)
  - Press one of the **GRAND PIANO** buttons (**CONCERT**, **ROCK**, or **JAZZ**) to select the one you want.

  - The button lamp of the selected tone will light.

- To select one of the other tones
  - While holding down the **FUNCTION** button, press the keyboard key that corresponds to the tone you want to select.

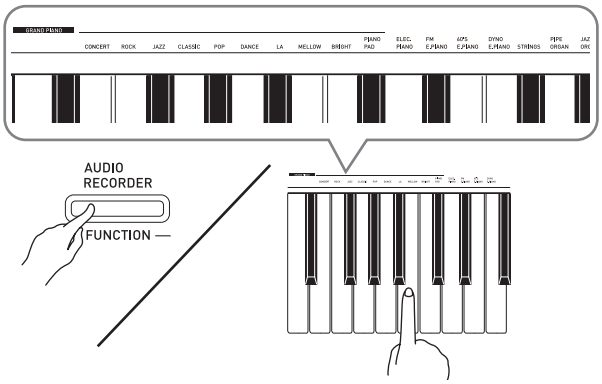

2. Use the **VOLUME** controller to adjust the volume.

NOTE

- Of the digital piano's 18 built-in tones, the first ten are grand piano tone. Each tone has its own distinctive merits, so you should select the tone that suits the song you are playing along with or your own personal preferences. The CONCERT, ROCK, and JAZZ tones are assigned to buttons for quick and easy selection.

Tone Name	Characteristics
CONCERT	A full concert grand piano tone that uses Linear Morphing* for dynamic and natural tone changes. This tone is designed to reproduce damper, resonance, and other piano nuances, which makes it ideal for virtually any type of piano performance.
ROCK	A bright grand piano tone with strong attack, making it suitable for rock music.
JAZZ	A grand piano tone with a sound and edge that is suitable for jazz music.
CLASSIC	A grand piano tone that reproduces natural enunciation. The subtle expression of this tone makes it perfect for classical music.
POP	A relatively bright grand piano tone. It is suitable for singing along with one's own accompaniment and for playing popular music.
DANCE	A crisp grand piano tone with short release. It is suitable for dance music and other types of music with a crisp rhythm.
LA	This is a refreshing grand piano tone with a touch of a chorus effect.
MELLOW	A warm, subdued grand piano tone.
BRIGHT	A bright and clear grand piano tone.
PIANO PAD	A layered grand piano and synthesized string pad tone.

* Feature that applies computer morphing technology to enable seamless changes between sounds sampled at various dynamics from a full concert grand piano.

Bass Tone (BASS)

Selecting the BASS (LOWER) tone in step 1 of the above procedure will assign the bass tone to the low range (left side) of the keyboard. The high range (right side) will be assigned the tone that was selected when you pressed the BASS key.

- BASS tone lets you effectively split the keyboard between two different tones.

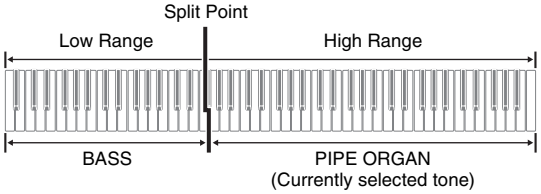

NOTE

- To return the keyboard to a single tone, select any tone other than BASS.
- You cannot select BASS when recording to Track 2.

Adjusting Acoustic Piano Sound Characteristics

The tones of your Digital Piano have built-in elements that give them the characteristic reverberation of an acoustic piano. Each of these elements can be individually adjusted to one of four levels.

- **HAMMER RESPONSE**
  Controls the time deviation between when a key is pressed and when the note actually sounds.

  Settings
  1: Fast 2: Grand piano feel 3: Slightly slower 4: Slow

- **STRING RESONANCE**
  Adjusts the characteristic reverberation (string resonance) of an acoustic piano.
  You can select a reverberation setting that matches the song being played or your own personal preference.

  Settings
  1: Suppressed 2: Slightly suppressed
  3: Reverberation 4: Strong reverberation

- **LID SIMULATOR**
  Adjusts how sound resonates in accordance with the opening state of a grand piano lid.

  Settings
  1: Lid closed 2: Lid opened slightly 3: Lid fully open
  4: Lid removed

NOTE
- Opening or closing the Digital Piano's lid does not affect the LID SIMULATOR setting.

1. While holding down the **FUNCTION** button, press the button that corresponds to the element whose setting you want to change.

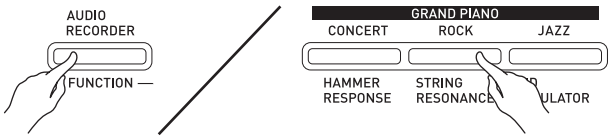

- Each press of the button cycles to the next option for that setting. The Digital Piano emits a beep pattern that indicates the currently selected option:
  One beep: Option 1 → Two beeps: Option 2 → Three beeps: Option 3 → Four beeps: Option 4 → One beep: Option 1, etc.
- The lamp of each button lights whenever the standard setting of its element is selected.

NOTE
- In addition to the above, piano tones also have a KEY OFF SIMULATOR.

- **KEY OFF SIMULATOR**
  Causes notes to decay when keyboard keys are released.

Layering Two Tones

Use the following procedure to layer two tones, so they sound at the same time.
When specifying two tones for layering, first tone you select will be the main tone, while the second tone will be the layered tone.

1. While holding down the **FUNCTION** button, press down the keyboard key for the first tone you want to layer and then the key for the second tone.

Example: First press the GRAND PIANO BRIGHT key and then the STRINGS key.

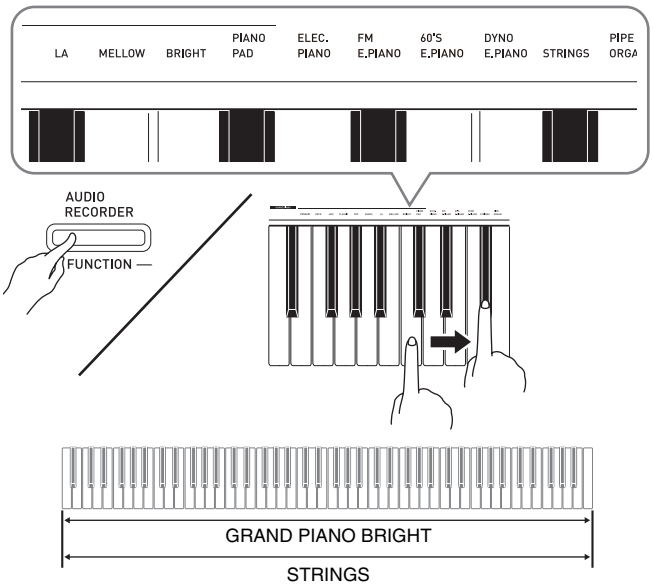

2. To unlayer the keyboard, select another tone by pressing the **GRAND PIANO** button or by using the procedure under "Selecting and Playing a Tone" (page E-5).

NOTE
- You cannot layer the BASS tone with another tone.
- You cannot perform the layer operation when recording to Track 2.

To adjust the volume balance between two layered tones

1. While holding down the **FUNCTION** button, use the keyboard keys shown below to adjust the volume of the layered tones.

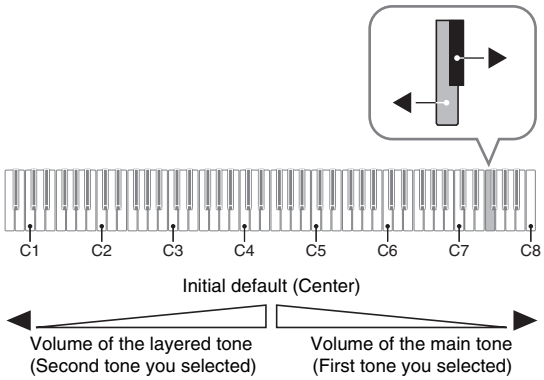

- To return the volume setting to its initial default, hold down the **FUNCTION** button and press both of the keys at the same time.

Using Effects

Hall simulator: Makes your notes resonate.
Chorus : Adds more breadth to your notes.

To apply a hall simulator

1. While holding down the **FUNCTION** button, press the keyboard key that corresponds to the hall simulator name you want to select.

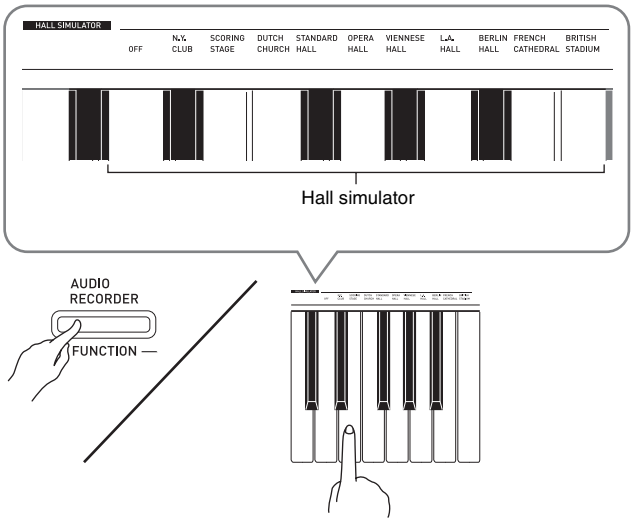

Hall simulator Name	Description
OFF	Off
N.Y. CLUB	Manhattan music club
SCORING STAGE	Los Angeles movie scoring stage (movie music recording studio)
DUTCH CHURCH	Amsterdam church with acoustics that are suitable for music
STANDARD HALL	Standard concert hall
OPERA HALL	Uniquely shaped Sydney Concert Hall
VIENNESE HALL	Viennese classic concert hall, which was build approximately 100 years ago
L.A. HALL	Large modern Los Angeles concert hall
BERLIN HALL	Berlin arena type classic concert hall
FRENCH CATHEDRAL	Large gothic cathedral in Paris
BRITISH STADIUM	Large outdoor stadium in the London suburbs

To apply chorus to a tone

1. While holding down the **FUNCTION** button, use the Chorus keyboard key to cycle through the available settings.

- Each press of the Chorus keyboard key causes the digital piano to beep according to which setting is selected, as shown in the table below.

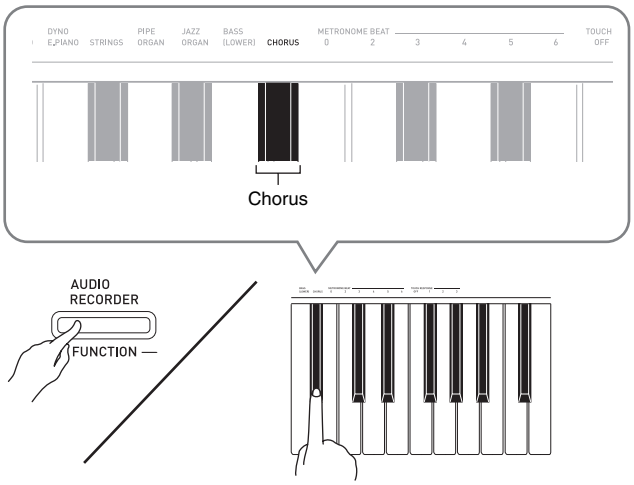

- Chorus

Number of Beeps	Setting
1 (long)	Off (OFF)
1 (short)	Light Chorus
2	Medium Chorus
3	Deep Chorus
4	Flanger (whooshing effect)

About DSP

DSP makes it possible to digitally produce complex acoustic effects. The DSP is assigned to each tone whenever you turn on Digital Piano power.

Using the Digital Piano's Pedals

Your Digital Piano comes equipped with three pedals: damper, soft, and sostenuto

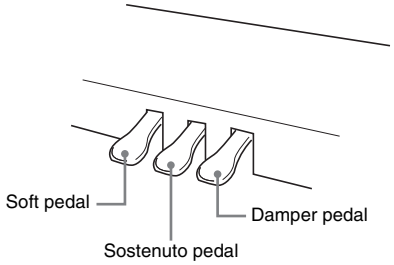

Pedal Functions

● **Damper Pedal**

Pressing the damper pedal while playing causes notes you play on the keyboard to be sustained (continue to play) longer.

- When GRAND PIANO is selected as the tone, using this pedal generates harmonic and other resonance, just like the damper pedal on an acoustic grand piano.

● **Soft Pedal**

Pressing this pedal while playing suppresses notes played on the keyboard after the pedal was pressed, and makes them sound softer.

● **Sostenuto Pedal**

Only the notes of the keys that are depressed when this pedal is pressed are sustained until the pedal is released.

NOTE

- If pressing the pedal does not produce the desired effect, it could mean that the pedal cord is not connected properly. Refer to step 1 under "To connect the cable" (page E-43).

Using the Metronome

1. Press the **METRONOME** button.

- This starts the metronome.
- The lamp above the **SONG** ▶/■ button flash in time with the metronome beat.

2. To change the beat, hold down the **FUNCTION** button as you press one of the METRONOME BEAT keys to select a beat setting.

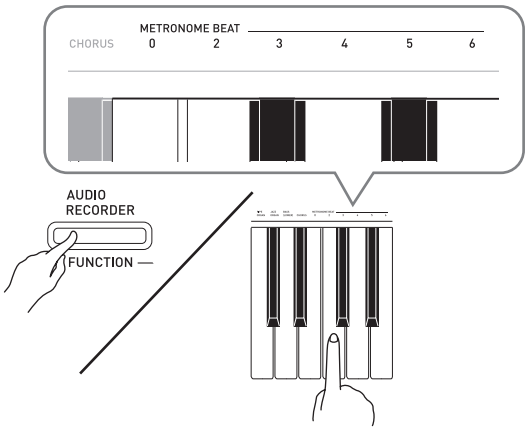

- You can specify beats per measure value of 0, 2, 3, 4, 5, or 6. Specifying 0 as the setting plays a straight click, without any chime. This setting lets you practice with a steady beat.

3. While holding down the **METRONOME** button, use the TEMPO keys to specify a tempo value in the range of 20 to 255 beats per minute.

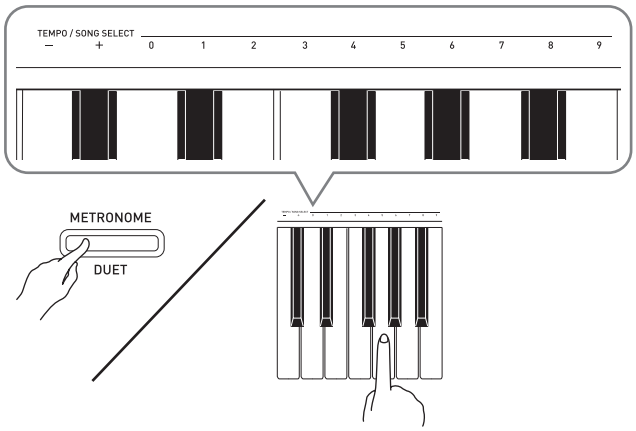

- Each press of the + or – key raises or lowers the tempo value by 1.
- You can use the value input keys (0 to 9) to enter a specific three-digit. Be sure to input all three digits.

Example: To enter "96", press keys 0, 9, 6.

4. Press the **METRONOME** button or **SONG** ▶/■ button to turn off the metronome.

NOTE

- To return the tempo setting to the default tempo of the currently selected Music Library tune, press the + and – keys at the same time in step 3. Pressing + and – while recording will return the tempo value to 120.

To adjust the metronome volume

You can perform the following procedure at any time, regardless of whether or not the metronome is sounding.

1. While holding down the **FUNCTION** button, use the METRONOME VOLUME keys to specify a volume value in the range of 0 to 42.

- For details about using the keyboard keys for settings, see "Keyboard Keys Used for Configuring Settings" on page E-22.
- Each press of the ▼ or▲ key raises or lowers the metronome volume value by 1.

NOTE

- To return to the initial default setting, press ▼ and ▲ at the same time.

Playing a Piano Duet

You can use the Duet Mode to split the Digital Piano's keyboard in the center so two people can play a duet.

Keyboard

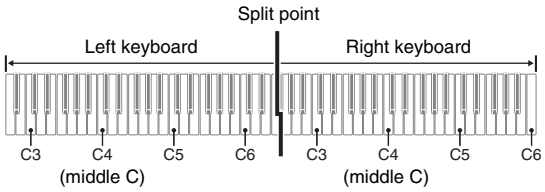

The left and right side keyboards have virtually the same range. The left pedal operates as the left side damper pedal, while the right pedal is the right side damper pedal.

Pedals

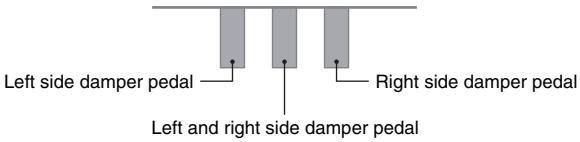

The Duet Mode is the perfect way to conduct lessons, with the teacher playing on the left side as the student playing the same song on the right side.

NOTE

- Only the damper pedal for the right side keyboard supports half-pedal operations.

1. Select the piano tone you want to use for the duet.

Example: GRAND PIANO (CLASSIC)

2. While holding down the **FUNCTION** button, press the **METRONOME** button to toggle duet on (lamp lit) and off (lamp unlit).

IMPORTANT!

- You cannot use the Duet Mode while recording (page E-15).

Changing the Octaves of the duet keyboards

You can change the ranges of the left and right keyboards in octave units from their initial default settings. This comes in handy, for example, if the initial default range is not enough when one person is playing the left hand part and another person is playing the right hand part.

1. While holding down the **FUNCTION** and **METRONOME** buttons, press the keyboard C key that you want located at C4 (middle C) of the left keyboard. Keep **FUNCTION** and **METRONOME** depressed as you advance to step 2, below.

- This will sound the note assigned to C4 and change the octave of the left keyboard.

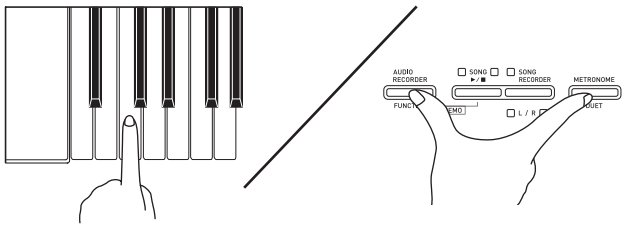

Example: Press the keyboard key of the leftmost C (C4) will assign the range shown below.

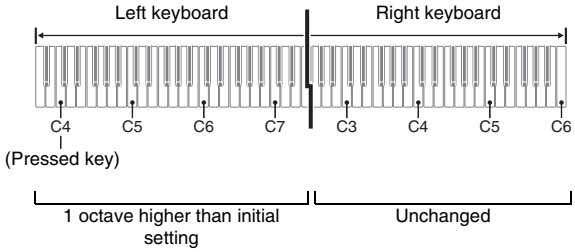

2. While still holding down the **FUNCTION** and **METRONOME** buttons, press the keyboard C key that you want located at C4 (middle C) of the right keyboard.

- This will sound the note assigned to C4 and change the octave of the right keyboard.

NOTE

- You can return the keyboards to their initial default ranges by exiting and then re-entering the Duet Mode.

Playing Back a Song

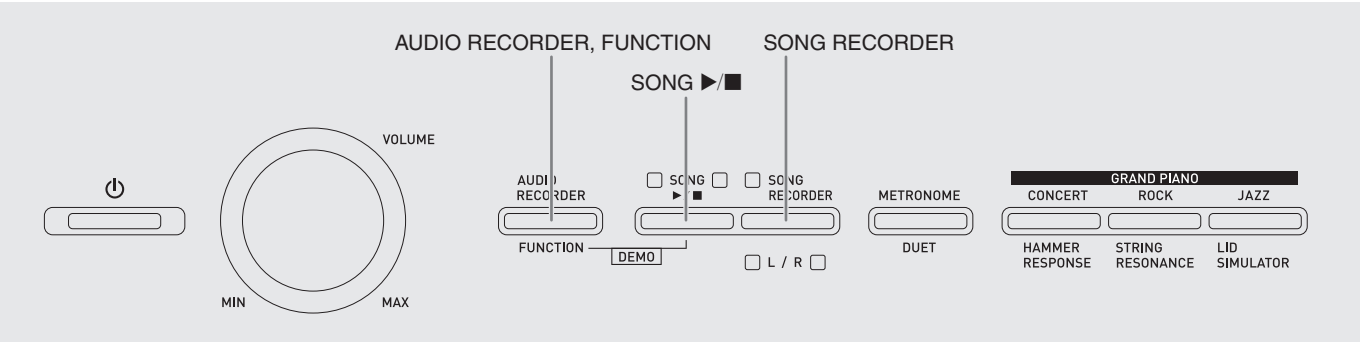

Playing Back All of the Built-in Songs

Your Digital Piano comes with a Music Library of 60 built-in tunes. You can play all 60 tunes in sequence, from beginning to end.

1. While holding down the **FUNCTION** button, press the **SONG ▶/■** button.

- This will start repeat demo playback of the built-in songs in sequence, from 01 through 60.
- You can play along with a song on the keyboard as it is playing. The tone assigned to the keyboard is the one that is preset for the song that is playing.

2. To change demo playback to a different song, hold down the **FUNCTION** button as you use the SONG SELECT keys to specify a song number.

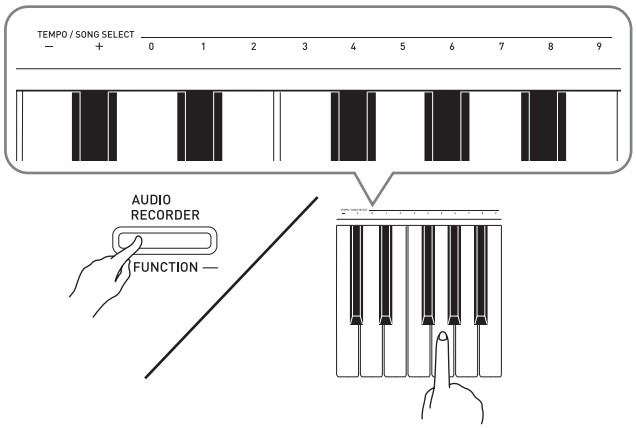

- Each press of the + or – key raises or lowers the song number by 1.
- You can use the value input keys (0 to 9) to enter a specific two-digit song number. Be sure to input both digits.

Example: To select song 08, enter 0 and then 8.

3. Press the **SONG ▶/■** button again to stop built-in song play.

NOTE

- The tune selection and playback stop operations described above are the only operations that are possible during demo tune play.

Playing Back a Specific Music Library Song

The Music Library includes both built-in songs (01 to 60), plus songs (61 to 70) that have been saved to Digital Piano memory from a computer*. You can use the procedure below to select one of these songs and play it back.

* You can download music data from the Internet and then transfer it from your computer to Digital Piano memory. See "Transferring Song Data with a Computer" on page E-36 for more information.

1. Find the song number of the song you want to play in the song list on page A-1.

2. To specify a song, hold down the **FUNCTION** button as you use the SONG SELECT keyboard keys to specify a song number.

- For information about how to perform this step, see the note under step 2 of the procedure under "Playing Back All of the Built-in Songs" on page E-12.

3. Press the **SONG ▶/■** button.

- This starts the playback of the song.

4. To stop playback, press the **SONG ▶/■** button again.

- Playback will stop automatically when the end of the song is reached.

NOTE

- Pressing the + and – keyboard keys at the same time will select song number 01.
- You also can adjust the playback tempo, Hall simulator, etc. Refer to the pages below for information about how to configure settings.
  - – Performance tempo: Page E-10 (step 3 under "Using the Metronome")
  - – Hall simulator: Page E-8 ("To apply a hall simulator")

Practicing with a Music Library Song

You can turn off the left hand part or right hand part of a song and play along on the Digital Piano.

NOTE

- The Music Library includes a number of duets. While a duet is selected, you can turn off the first piano (Primo) or second piano (Secondo) tone and play along with the song.

PREPARATION

- Select the song you want to practice and adjust the tempo. See step 3 under "Using the Metronome" (page E-10).
- A number of tunes have tempo changes part way through in order to produce specific musical effects.

1. While holding down the **FUNCTION** button, press the **SONG RECORDER (L/R)** button to select the part you want to turn off.

- Pressing a button toggles its part on (button lamp on) and off (button lamp off).

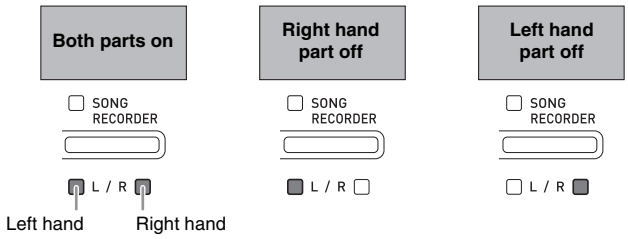

2. Press the **SONG ▶/■** button.

- This starts playback, without the part you turned off in step 1.

3. Play the missing part on the keyboard.

4. To stop playback, press the **SONG ▶/■** button again.

Playing Back Audio Data Stored on a USB Flash Drive

You can use your Digital Piano to play back audio data (WAV files*) stored on a commercially available USB flash drive.
See "USB Flash Drive" on page E-26 for more information.
* Linear PCM, 16bit, 44.1 kHz, Stereo

PREPARATION

- Prepare a USB flash drive that contains data recorded to it using the Digital Piano's Audio Recorder. See "Recording to a USB Flash Drive (Audio Recorder)" on page E-18 for more information.
- You can also use a computer to save audio data (WAV file) to the USB Flash Drive for playback. See "Storing Standard Audio Data (WAV Files) to a USB Flash Drive" on page E-26 for more information.
- Insert the USB flash drive that contains the data you want to play back into your Digital Piano's USB flash drive port.

1. Press the **AUDIO RECORDER** button. Note that you should press the button and immediately release it. Do not hold it down.

- This causes the two **SONG ▶/■** button indicator lamps to light.

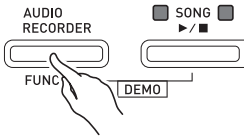

2. Press the **SONG RECORDER** button so its lamp is lit.

3. Hold down the **FUNCTION** button as you use the SONG SELECT keyboard keys to select the song you want.

- Pressing the plus (+) key scrolls forward through song file names (TAKE01.WAV, TAKE02.WAV, etc.). Pressing the minus (–) key scrolls backward.
- You also can use the number (0 through 9) keyboard keys to directly select a file by inputting its number. The Digital Piano will beep if there is no file on the USB flash drive that corresponds to the number you input.

4. While holding down the **AUDIO RECORDER** button, press the **SONG ▶/■** button.

- This will start playback of the selected song.

5. To stop playback of the song, press the **SONG ▶/■** button.

Recording and Playback

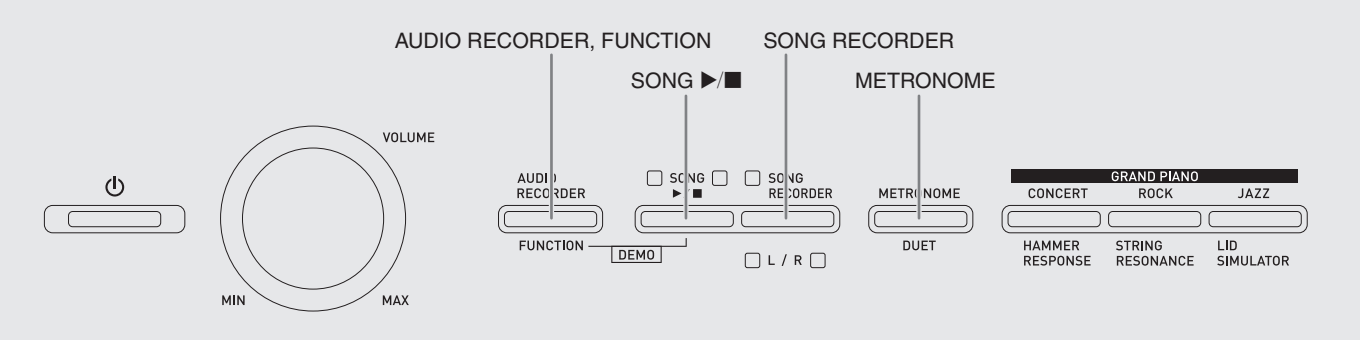

You can use the Song Recorder to record what you play on the Digital Piano to built-in song memory. When a commercially available USB flash drive is inserted in the Digital Piano's USB flash drive port, audio data is recorded to and played back from the USB flash drive (Audio Recorder).

Recording to Built-in Song Memory (Song Recorder)

Tracks

A track is a container of recorded data, and a song consists of two tracks: Track 1 and Track 2. You can record each track separately and then combine them so they play back together as a single song.

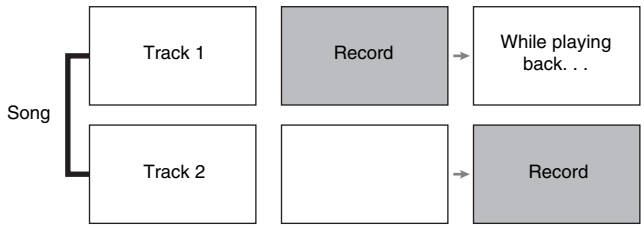

Memory Capacity

- You can record approximately 5,000 notes in Digital Piano memory.
- The **SONG RECORDER** button lamp will flash at high speed when memory runs low.
- Recording stops automatically if the number of notes in memory exceeds the maximum.

Recorded Data

- Keyboard play
- Tone used
- Pedal operations
- Hall simulator and chorus settings (Track 1 only)
- Tempo setting (Track 1 only)
- Layer setting (Track 1 only)
- Split setting (Track 1 only)
- Octave shift setting (Track 1 only)

Recording Data Storage

- Starting a new recording deletes any data that was previously recorded in memory.
- Should power fail during recording, all of the data in the track you are recording will be deleted.

IMPORTANT!

- CASIO COMPUTER CO., LTD. takes no responsibility for any damages, lost profits, or claims by third parties arising from the deletion of recorded data due to malfunction, repair, or for any other reason.

Using the SONG RECORDER Button

Each press of the **SONG RECORDER** button cycles through the recording options in the sequence shown below.

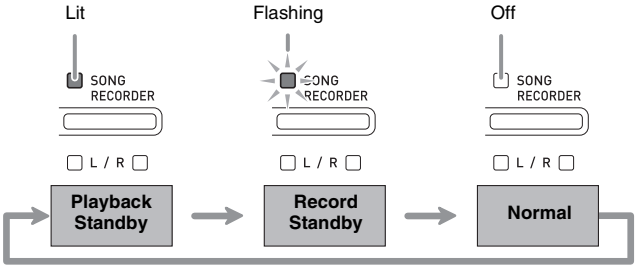

Recording to a Specific Song Track

After recording to either of the tracks of a song, you can record to the other track while listening to playback what you recorded in the first track.

1. Press the **SONG RECORDER** button twice so its lamp is flashing.

- At this time the **L** lamp will flash to indicate that the Digital Piano is standing by for recording to Track 1.

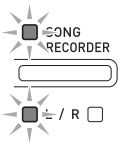

2. While holding down the **FUNCTION** button, press the **SONG RECORDER (L/R)** button to select the track you want to record.

- Make sure that the indicator lamp for the record track is flashing.
  Track 1: **L** lamp
  Track 2: **R** lamp

Example: Track 1 selected

3. Select the tone and effects (Track 1 only) you want to use in your recording.

- Tone (page E-5)
- Effects (page E-8)

NOTE

- If you want the metronome to sound while you are recording, configure the beat and tempo settings, and then press the **METRONOME** button. See "Using the Metronome" on page E-10 for more information.

4. Start playing something on the keyboard.

- Recording will start automatically.

5. To stop recording, press the **SONG ▶/■** button.

- This will cause the **SONG RECORDER** button lamp and the lamp of the track you recorded to change from flashing to lit.
- To play back the track you just recorded, press the **SONG ▶/■** button.

6. After you are finished recording or playing back, press the **SONG RECORDER** button so its lamp goes out.

Recording to One Track while Listening to Playback of the Other Track

1. Press the **SONG RECORDER** button so its lamp is lit.

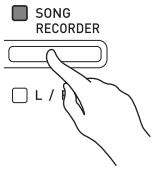

2. While holding down the **FUNCTION** button, press the **SONG RECORDER (L/R)** button to select the track you want to play back while recording.

3. Press the **SONG RECORDER** button so its lamp is flashing.

- This will cause the **L** lamp to flash.

4. While holding down the **FUNCTION** button, press the **SONG RECORDER (L/R)** button to select the track you want to record.

- Make sure that the indicator lamp for the record track is flashing.

Example: To listen to playback of Track 1 as you record to Track 2

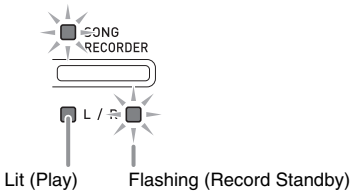

5. Select the tone and effects (Track 1 only) you want to use for your recording.

6. Press the **SONG ▶/■** button or play something on the keyboard.

- This will start both playback of the recorded track and recording to the other track.

7. To stop recording, press the **SONG ▶/■** button.

Playing Back from Digital Piano Memory

1. Press the **SONG RECORDER** button so its lamp is lit.

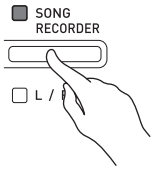

NOTE

- When a song has something recorded in both tracks, you can turn off one track and play back just the other track, if you want.

2. Press the **SONG ▶/■** button.

- This starts playback of the song and/or track you selected.

NOTE

- You can change the tempo setting as a track is playing.
- Press the **SONG ▶/■** button again to stop playback.

Deleting Recorded Data

The following procedure deletes a specific track of a song.

IMPORTANT!

- The procedure below deletes all of the data of the selected track. Note that the delete operation cannot be undone. Check to make sure you really do not need the data in Digital Piano memory before you perform the following steps.

1. Press the **SONG RECORDER** button twice so its lamp is flashing.

2. While holding down the **FUNCTION** button, press the **SONG RECORDER (L/R)** button to select the track you want to delete.

3. Press the **SONG RECORDER** button until its lamp is lit.

- This will cause the lamp of the track you selected in step 2 of this procedure to flash.

Example: If you selected Track 2 for deletion

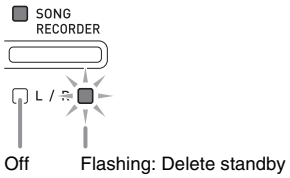

4. Once again, hold down the **FUNCTION** button as you press the **SONG RECORDER** button.

- This deletes the selected track and enters playback standby.
- To cancel the delete operation at any time, press the **SONG RECORDER** button twice so its lamp is unlit.

NOTE

- Only the Digital Piano's **SONG RECORDER (L/R)** button are operational from step 3 until you actually perform the delete operation in step 4. No other button operation can be performed.

Recording to a USB Flash Drive (Audio Recorder)

Anything played on the Digital Piano is recorded to the USB flash drive as audio data (WAV files*). If you play along on the Digital Piano as you play back data stored in song memory, the memory playback and your keyboard play are both recorded to USB flash drive.

* Linear PCM, 16bit, 44.1 kHz, Stereo

Recording Capacity

- 99 files (No. 01 to No. 99)
- Approximately 25 minutes maximum recording per file.

Recorded Data

- Anything played on the Digital Piano is recorded.
- Individual part recording is not supported.

Recording Data Storage

Each new recording of audio data to a USB flash drive is automatically assigned a new file name, so existing data is not overwritten.

Recording Digital Piano Play (Audio Recorder)

PREPARATION

- Be sure to format the USB flash drive on the Digital Piano before using it. See "USB Flash Drive" on page E-26 for more information.

1. Insert the USB flash drive into the Digital Piano's USB flash drive port.

- When you plug in a USB flash drive, the Digital Piano initially needs to "mount" the USB flash drive and prepare for data exchange. Note that Digital Piano operations are momentarily disabled while a USB flash drive mounting sequence is being performed. The Digital Piano's L/R lamps flash while the mounting process is in progress. It may take up to 10 or 20 seconds or even longer for a USB flash drive to be mounted. Do not attempt to perform any operation on the Digital Piano while a mounting sequence is in progress (while L/R lamps are flashing). A USB flash drive needs to be mounted each time it is connected to the Digital Piano.

2. Press the **AUDIO RECORDER** button. Note that you should press the button and immediately release it. Do not hold it down.

- This causes the two **SONG ▶/■** button indicator lamps to light.

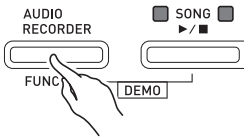

3. Press the **SONG RECORDER** button so its lamp is lit.

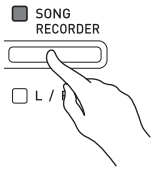

4. Start playing something on the keyboard.

- The **SONG RECORDER** button lamp will flash once or twice to indicate that recording to the USB flash drive has started.

NOTE

- Do not remove the USB flash drive from the USB flash drive port while the two SONG ▶/■ lamps are flashing or lit. Doing so will interrupt recording and may corrupt data.

5. To stop recording, press the **AUDIO RECORDER** button.

- The two **SONG ▶/■** button lamps will flash together three or four times to let you know that audio recording is complete. If you want to continue recording, perform the operations from step 4 of this procedure. If you want to play back what you recorded, perform the operations from step 3 under "Playing Back Data Recorded on a USB Flash Drive" (page E-19). To exit the audio record/playback operation, press the **AUDIO RECORDER** button.

Recording Digital Piano Play as Data Recorded in Song Memory Plays Back (Audio Recorder)

1. Press the **AUDIO RECORDER** button. Note that you should press the button and immediately release it. Do not hold it down.

- This causes the two **SONG ▶/■** button indicator lamps to light.

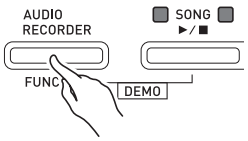

2. Press the **SONG RECORDER** button so its lamp is lit.

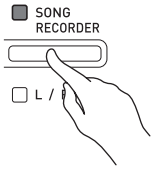

3. Press the **SONG ▶/■** button.

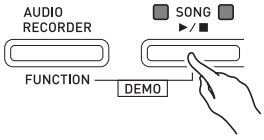

- This will start playback of the current song memory contents. Play along on the Digital Piano.

4. To stop recording, press the **AUDIO RECORDER** button.

- The two **SONG ▶/■** button lamps will flash together three or four times to let you know that audio recording is complete. If you want to continue recording, perform the operations from step 4 under "Recording Digital Piano Play (Audio Recorder)" (page E-18). If you want to play back what you recorded, perform the operations from step 3 under "Playing Back Data Recorded on a USB Flash Drive" (page E-19). To exit the audio record/playback operation, press the **AUDIO RECORDER** button.

Playing Back Data Recorded on a USB Flash Drive

1. Press the **AUDIO RECORDER** button. Note that you should press the button and immediately release it. Do not hold it down.

- This causes the two **SONG ▶/■** button indicator lamps to light.

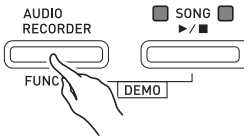

2. Press the **SONG RECORDER** button so its lamp is lit.

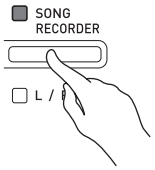

3. While holding down the **AUDIO RECORDER** button, press the **SONG ▶/■** button.

- This starts playback of the last song you recorded.

To select a file and play it

Hold down the **FUNCTION** button as you use the SONG SELECT keyboard keys to select the song you want.

- Press the minus (–) keyboard key to scroll back through songs in reverse chronological order.
- Press the plus (+) keyboard to key scrolls forward.
- You also can use the number keyboard keys (0 through 9) to inputting a two-digit file number (01 to 99) and directly select a file (TAKE01.WAV, TAKE02.WAV, etc.). The keyboard will beep if there is no file on the USB flash drive that corresponds to the number you input.

4. To stop playback of the song, press the **SONG ▶/■** button.

Deleting an Audio File from a USB Flash Drive

Files can be deleted one at a time.

IMPORTANT!

- The procedure below deletes all of the data of the selected file. Note that the delete operation cannot be undone. Check to make sure you really do not need the data in Digital Piano memory before you perform the following steps.

1. Press the **AUDIO RECORDER** button. Note that you should press the button and immediately release it. Do not hold it down.

- This causes the two **SONG ▶/■** button indicator lamps to light.

2. Press the **SONG RECORDER** button twice so its lamp is flashing.

3. If you want to delete the last file you recorded, jump directly to step 4.

To select a file and delete it

Hold down the **FUNCTION** button as you use the SONG SELECT keyboard keys to select the song you want.

- Press the minus (–) keyboard key to scroll back through songs in reverse chronological order.
- Press the plus (+) keyboard to key scrolls forward.
- You also can use the number keyboard keys (0 through 9) to inputting a two-digit file number (01 to 99) and directly select a file (TAKE01.WAV, TAKE02.WAV, etc.). The keyboard will beep if there is no file on the USB flash drive that corresponds to the number you input.

4. Hold down the **SONG RECORDER** button until both the L and R lamps flash.

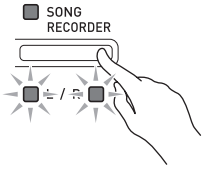

5. Once again, hold down the **FUNCTION** button as you press the **SONG RECORDER** button.

- The Digital Piano will enter the song recorder playback mode after file deletion is complete.
- To cancel the delete operation at any time, press the **SONG RECORDER** button twice so its lamp is unlit.

NOTE

- When you record a new file, it is always automatically assigned the next new file number in the sequence of files currently on the USB flash drive, even if a previous number is unused (because a file was deleted). For example, if a USB flash drive contains files numbered 01, 02, 04, 07, 08, the next file recorded to the USB flash drive will be assigned file number 09.

Configuring Settings with the Keyboard

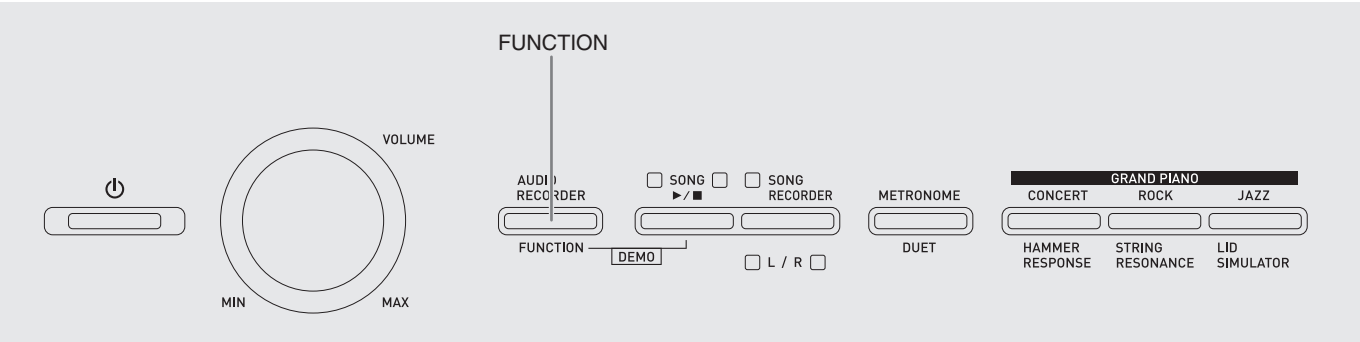

In addition to selecting tones and Music Library tunes, you also can use the **FUNCTION** button in combination with the keyboard keys to configure effect, keyboard touch, and other settings.

To configure settings with the keyboard

1. Use the "Parameter List" on pages E-23 - E-25 to find the setting you want to configure, and note its details.

2. Use "Keyboard Keys Used for Configuring Settings" on page E-22 to find the location on the keyboard for configuring the setting you want.

3. While holding down the **FUNCTION** button, press the keyboard key for the setting you want to configure.
   - The Digital Piano will sound an operation tone after it configures the setting.

   Example: To lower the transpose setting by one semitone

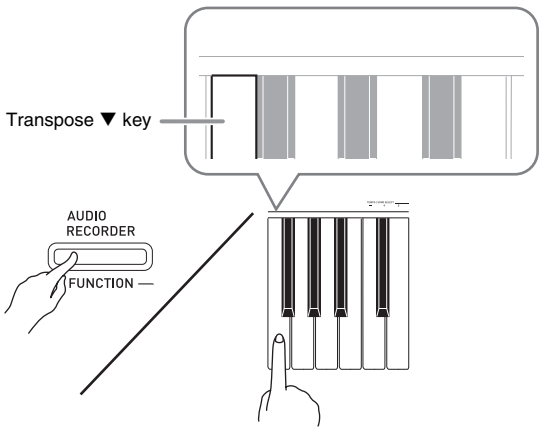

4. Release the **FUNCTION** button to complete the setting procedure.

NOTE
- You can configure the Digital Piano so no operation tone sounds in step 3. For details, see "⑲ Operation tone" under "Parameter List" on pages E-23 - E-25.

Keyboard Setting Operation Types

There are four types of operations that you can perform while configuring settings with the keyboard keys: Type A, Type B, Type C, and Type D.

Type A: Direct input

Example: Pressing the STRINGS keyboard key to select the STRINGS 1 tone

Type B: Raising or lowering a setting using the + and – or ▼ and ▲ keyboard keys
- Holding down a key raises or lowers the setting at high speed.
- To return to the initial default setting, press both keys at the same time.

Type C: Value input using the numeric keys (0 to 9)

Example: To enter "20", press keys 2, 0.

Type D: Toggling or cycling through settings by pressing a keyboard key
- When you press a key, the Digital Piano will beep to let you know which setting is selected.
- A long beep indicates that the applicable setting is turned off.

Example: While chorus is turned off, pressing the Chorus keyboard key twice will cause the digital piano to beep twice, which indicates that the Medium Chorus setting is selected.

NOTE
- You can find out what operation type applies to each setting by checking the "Operation Type" in the "Parameter List" on pages E-23 - E-25.

Keyboard Keys Used for Configuring Settings

- The numbers ① through ㉖ correspond to the same numbers in the “Parameter List” on pages E-23 - E-25.

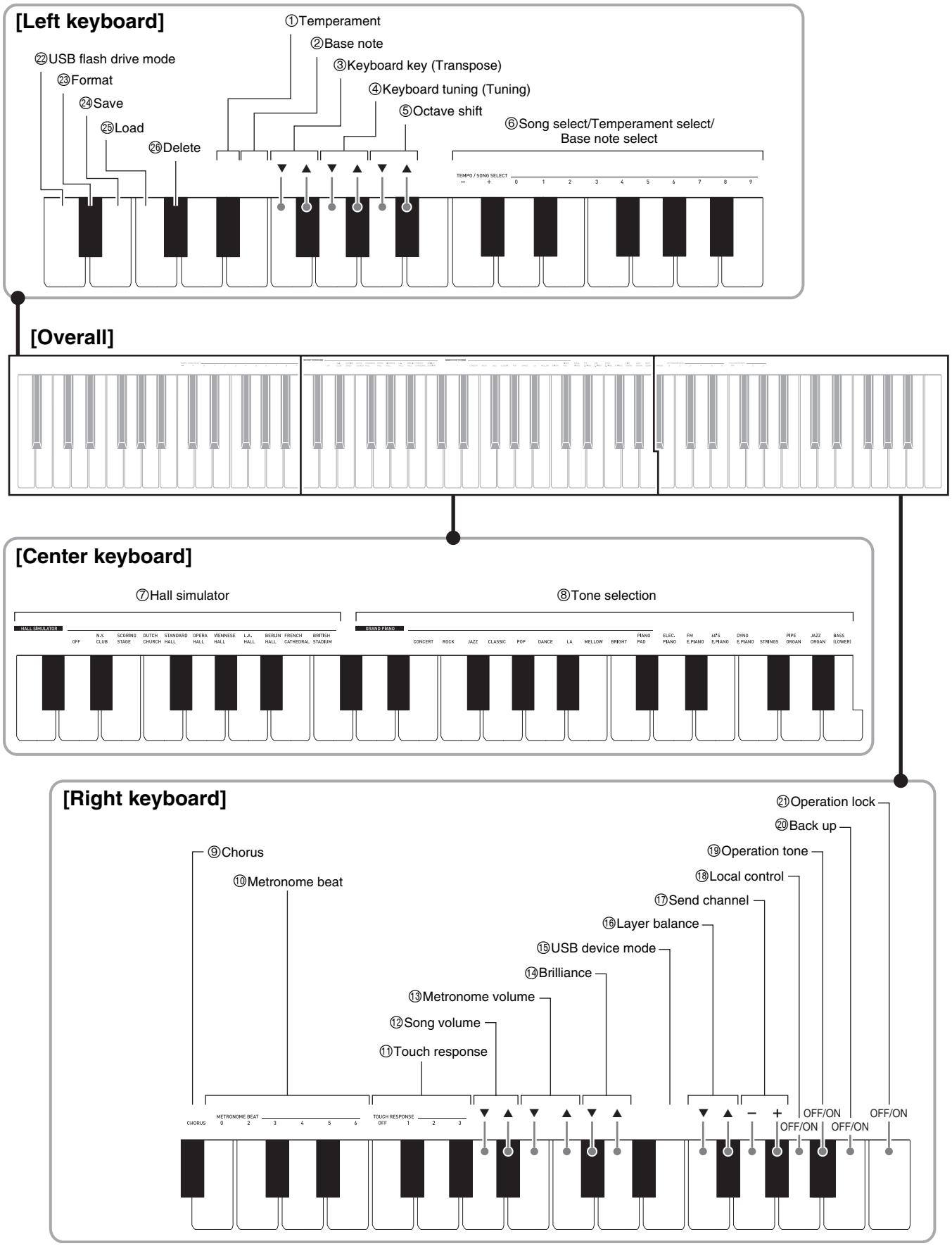

Parameter List

■ Tones

Parameter	Settings	Operation Type (page E-21)	Description	Remarks
⑦ Hall simulator	Off (OFF), N.Y. CLUB to BRITISH STADIUM Default: STANDARD HALL	A	Specifies the hall simulator of notes. (page E-8)	
⑧ Tone selection	See page E-5. Default: GRAND PIANO (CONCERT)	A	Assigns a tone to the keyboard. (page E-5)	
⑨ Chorus	Off (OFF), 1 to 4 Default: 2	D	Controls the breadth of notes. (page E-8)	
⑭ Brilliance	–3 to 0 to 3 Default: 0	B	Specifies the brilliance of notes. Pressing [+] makes notes brighter and harder. Pressing [–] makes notes mellower and softer.	• To return the setting to its initial default (0), press [+] and [–] at the same time.
⑯ Layer balance	–24 to 0 to 24 Default: 0	B	Specifies the volume balance between the main tone and the layered tone. (page E-8)	

■ Song/Metronome

Parameter	Settings	Operation Type (page E-21)	Description	Remarks
⑥ Song select (SONG SELECT)	01 to 70 Default: 01	B (+/–) C (0 to 9)	Selects a Music Library tune. (page E-13)	• Always enter two-digits when using the number keys (0 to 9) to input a value. *Example:* To input 8, enter 0, 8 (leading zero required). • This setting cannot be changed while recording.
⑫ Song volume	00 to 42 Default: 42	B	Sets the volume level of Music Library playback.	• This setting cannot be changed while recording.
⑩ Metronome beat (METRONOME BEAT)	0, 2, 3, 4, 5, 6 Default: 4	A	Specifies the metronome beat. (page E-10)	• The metronome beat setting cannot be changed while playback of a Music Library tune is in progress.
⑬ Metronome volume	00 to 42 Default: 36	B	Specifies the metronome volume. (page E-10)	

■ Keyboard

Parameter	Settings	Operation Type (page E-21)	Description	Remarks
③ Keyboard key (Transpose)	–12 to 0 to 12 Default: 0	B	Raises or lowers the tuning of the Digital Piano in semitone steps.	• The transpose setting cannot be configured while Music Library playback is in progress or while in the Duet Mode. • Raising the key of the Digital Piano can cause notes the highest part of the range to become distorted.
④ Keyboard tuning (Tuning)	415.5Hz to 440.0Hz to 465.9Hz Default: 440.0Hz	B	Raises or lowers the overall pitch of the Digital Piano in 0.1Hz steps from the standard pitch of A4 = 440.0Hz.	• The pitch setting cannot be changed while playback of a Music Library tune is in progress.
⑤ Octave shift	–2 to 0 to 2 Default: 0	B	Change the range of the keyboard in octave units.	• You can configure octave shift settings for the main tone part and layered tone part. • You cannot configure octave shift settings for split tone parts.
① Temperament ⑥ Temperament select	Temperament: 00 to 16 Default: 00 (Equal Temperament)	B (+/–) C (0 to 9)	You can change the scale (tuning system) of the keyboard from standard equal temperament to another tuning that is more suitable for playing Indian music, Arabic music, classical pieces, etc.	**<Temperaments>** 00: Equal / 01: Pure Major / 02: Pure Minor / 03: Pythagorean / 04: Kirnberger 3 / 05: Werckmeister / 06: Mean-Tone / 07: Rast / 08: Bayati / 09: Hijaz / 10: Saba / 11: Dashti / 12: Chahargah / 13: Segah / 14: Gurjari Todi / 15: Chandrakauns / 16: Charukeshi
② Temperament Base note ⑥ Temperament Base note select	Base note: –, +, 0 to 9 (C to B) Default: C	A	Specifies the base note of the currently selected temperament. • In the case of equal temperament, changing the base note will not affect the scale.	**<Base notes>** –: C / +: C♯ / 0: D / 1: E♭ / 2: E / 3: F / 4: F♯ / 5: G / 6: A♭ / 7: A / 8: B♭ / 9: B
⑪ Touch response (TOUCH RESPONSE)	Off (OFF), 1 to 3 Default: 2	A	Specifies the relative touch of the keyboard keys. Setting a smaller value causes lighter touch to produce more powerful sound.	

■ MIDI and Other Settings

Parameter	Settings	Operation Type (page E-21)	Description	Remarks
⑮ USB device mode	MIDI, Storage Default: MIDI	—	The Digital Piano enters the MIDI mode automatically when it is connected to a computer by a USB cable. Select storage when saving Recorder memory song data to a computer or when loading computer song data to Digital Piano memory. (page E-36)	• While Storage is selected for this setting, the **GRAND PIANO** (**CONCERT**, **ROCK**, and **JAZZ**) button lamps flash, and all other lamps are unlit. • All Digital Piano operations are disabled at this time. • Each press of the USB device mode keyboard key toggles between the MIDI and storage modes.
⑰ Send channel	01 to 16 Default: 01	B	Specifies one of the MIDI channels (1 through 16) as the Send channel, which is used for sending MIDI messages to an external device.	
⑱ Local control	Off, On Default: On	D	Selecting "Off" for Local control cuts off the Digital Piano's sound source, so no sound is produced by the Digital Piano when keys are pressed.	• The local control setting cannot be changed while playback of a Music Library tune is in progress.

Parameter	Settings	Operation Type (page E-21)	Description	Remarks
⑲ Operation tone	Off, On Default: On	D	Selecting "Off" disables sounding of the operation tone whenever a keyboard key is pressed while the **FUNCTION** or **METRONOME** is depressed.	• This setting is retained even when the Digital Piano is turned off. • The operation tone setting cannot be changed while Music Library playback is in progress, while the metronome is sounding, and during recording.
⑳ Back up	Off, On Default: Off	D	When "On" is selected for this setting, the Digital Piano will remember its current settings*1, and restore them when it is turned on again. When "Off" is selected, settings*2 are reset to their initial defaults whenever the Digital Piano is turned on. *1 The following settings are not remembered. • Duet Mode • Tune LR (part) • Local control *2 Except for the operation tone on/off setting.	• The back up setting cannot be changed while Music Library playback is in progress, while the metronome is sounding, in the Duet Mode, and during recording.
㉑ Operation lock	Off, On Default: Off	D	Selecting "On" for this setting locks the Digital Piano's buttons (except for the ⏻ (POWER) button and the buttons required for unlock), so no operation can be performed. Turn on operation lock when you want to protect against unintentional button operations.	• The operation lock setting cannot be changed while Music Library playback is in progress, while the metronome is sounding, and during recording.
㉒ USB flash drive mode	Off, On Default: Off	—	USB flash drive mode.	
㉓ Format	Off, On Default: Off	—	Formats a USB flash drive.	
㉔ Save	Off, On Default: Off	—	Stores data to a USB flash drive.	
㉕ Load	Off, On Default: Off	—	Loads data from a USB flash drive to Digital Piano song memory.	
㉖ Delete	Off, On Default: Off	—	Deletes USB flash drive data.	

USB Flash Drive

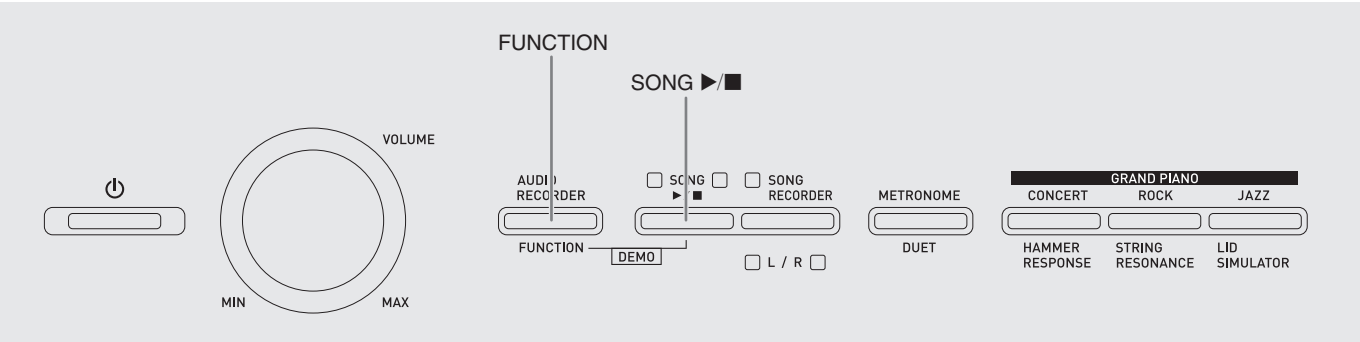

Your Digital Piano supports the following USB flash drive operations.

- USB flash drive formatting
- Data storage to a USB flash drive
  - Song data recorded with the Digital Piano's song recorder is on a USB flash drive as MIDI files (SMF format 0).
  - Standard audio data from a computer (WAV files) can also be stored on a USB flash drive and played back on the Digital Piano.
  - Digital Piano play can be recorded directly to a USB flash drive. For details, see "Recording to a USB Flash Drive (Audio Recorder)" (page E-18).
- USB flash drive data loading to Digital Piano memory
  - MIDI files and CASIO format files stored on a USB flash drive can be loaded into the Digital Piano's Music Library (61 to 70).
- Delete data from a USB flash drive
- Easy play back of song data from a USB flash drive

■ Supported USB Flash Drives

Capacity: 32GB or less recommended

IMPORTANT!

- Operation of the above type of USB flash drive has been confirmed, but this does not guarantee operation.
- Use a FAT (FAT32) format USB flash drive.
- You may not be able to use a USB flash drive that is recognized as multiple drives on your computer.
- A USB flash drive that is recognized as a CD-ROM on your computer is not supported.
- A USB flash drive with an anti-virus function and/or security functions is not supported.

■ Save and Load Data Formats and Capacities

Data Type	Description (File Name Extension)	Supported Operations	
		Save to USB flash drive	Load from USB flash drive
User songs (page E-36)	One of the following two types of music data 1. CASIO format data (CM2) 2. Standard MIDI files (MID) SMF Format 0 or Format 1	–	○
Songs recorded with song recorder (page E-15)	Song data recorded on this Digital Piano (MID)	○*	–

* Can be converted to a standard MIDI file (SMF format 0, file name extension .MID) and saved.

Storing Standard Audio Data (WAV Files) to a USB Flash Drive

Performing a record operation with the Digital Piano's audio recorder creates a folder named AUDIO on the USB flash drive. WAV files are stored in the AUDIO folder, automatically assigning them names from TAKE01.WAV to TAKE99.WAV. You also can connect a USB flash drive to a computer and change the names of audio data (WAV) files to the format "TAKEXX.WAV"*, and move them to the AUDIO folder. Then you will be able to play them back on the Digital Piano.

* XX = 01 to 99

USB Flash Drive and USB Flash Drive Port Handling Precautions

IMPORTANT!

- Be sure to observe the precautions provided in the documentation that comes with the USB flash drive.
- Avoid using a USB flash drive under the following conditions. Such conditions can corrupt data stored on the USB flash drive.
  - Areas subjected to high temperature, high humidity, or corrosive gas
  - Areas subjected to strong electrostatic charge and digital noise
- Never remove the USB flash drive while data is being written to or loaded from it. Doing so can corrupt the data on the USB flash drive and damage the USB flash drive port.
- Never insert anything besides a USB flash drive into the USB flash drive port. Doing so creates the risk of malfunction.
- A USB flash drive can become warm after very long use. This is normal and does not indicate malfunction.
- Static electricity conducted to the USB flash drive port from your hand or from a USB flash drive can cause malfunction of the Digital Piano. If this happens, turn the Digital Piano off and then back on again.

Copyrights

You are allowed to use recordings for your own personal use. Any reproduction of an audio or music format file, without the permission of its copyright holder, is strictly prohibited under copyright laws and international treaties. Also, making such files available on the Internet or distributing them to third parties, regardless of whether such activities are conducted with or without compensation, is strictly prohibited under copyright laws and international treaties. CASIO COMPUTER CO., LTD. shall not be held in any way liable for any use of this Digital Piano that is illegal under copyright laws.

Connecting a USB Flash Drive to and Detaching It from the Digital Piano

IMPORTANT!

- Never plug any other device besides a USB flash drive into the USB flash drive port.
- When you plug in a USB flash drive, the Digital Piano initially needs to “mount” the USB flash drive and prepare for data exchange. Note that Digital Piano operations are momentarily disabled while a USB flash drive mounting sequence is being performed. The Digital Piano’s L/R lamps flash while the mounting process is in progress. It may take up to 10 or 20 seconds or even longer for a USB flash drive to be mounted. Do not attempt to perform any operation on the Digital Piano while a mounting sequence is in progress (while L/R lamps are flashing). A USB flash drive needs to be mounted each time it is connected to the Digital Piano.

■ To insert a USB flash drive

1. As shown in the illustration below, insert the USB flash drive into the Digital Piano’s USB flash drive port.
   - Carefully push the USB flash drive in as far as it will go. Do not use undue force when inserting the USB flash drive.

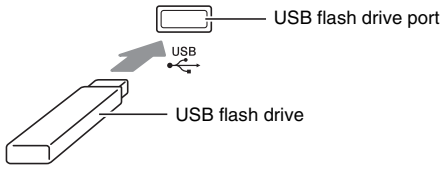

■ To remove a USB flash drive

1. Check to confirm that there is no data exchange operation being performed, and then pull the USB flash drive straight out.

Formatting a USB Flash Drive

IMPORTANT!

- Be sure to format a USB flash drive on the Digital Piano before using it for the first time.
- Before formatting a USB flash drive, make sure it does not have any valuable data stored on it.
- The format operation performed by this Digital Piano is a “quick format”. If you want to completely delete all of the data in USB flash drive, format it on your computer or some other device.

<Supported USB Flash Drives>

This Digital Piano supports USB flash drives formatted to FAT32. If your USB flash drive is formatted to a different file system, use the Windows format function to reformat it to FAT32. Do not use quick format.

1. Insert the USB flash drive you want to format into the Digital Piano’s USB flash drive port.

2. While holding down the **FUNCTION** button, press the keyboard key that corresponds to the USB flash drive mode.

- This will cause the L/R lamps to flash.

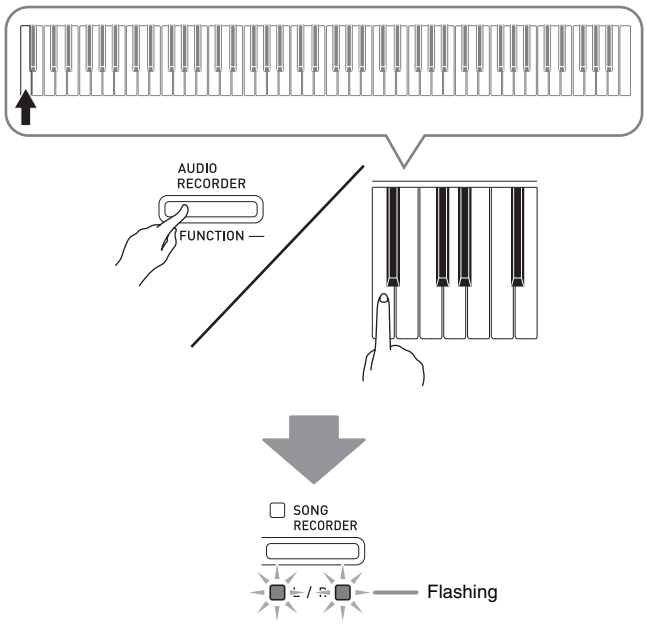

3. While holding down the **FUNCTION** button, press the format keyboard key.

- This will cause the **SONG RECORDER** button lamp to light.

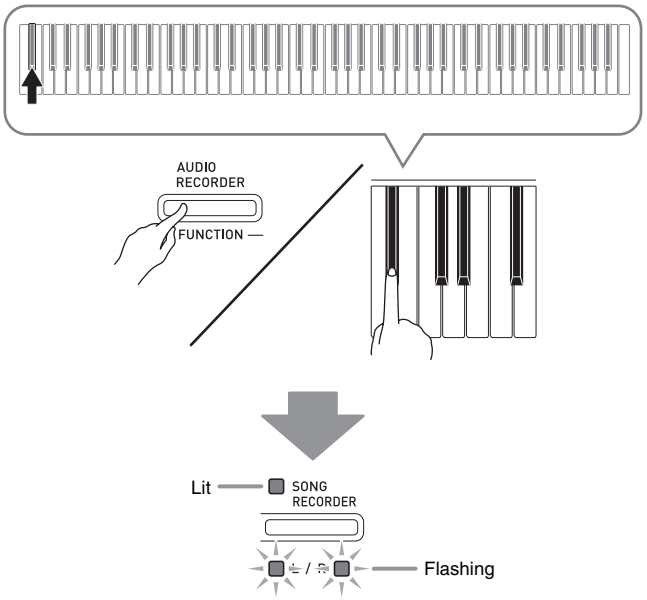

- To cancel the format operation, hold down the **FUNCTION** button as you press the USB flash drive mode key.

4. Press the **SONG ▶/■** button.

- This starts formatting.
- After formatting is complete, the L/R lamps will light and the Digital Piano will exit the formatting operation.

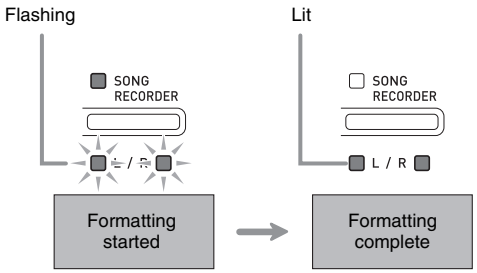

NOTE

- Formatting a large-capacity USB flash drive can take several minutes.

Saving a Recorded Song to a USB Flash Drive

Use the procedure below to save data you recorded on the Digital Piano to a USB flash drive as a MIDI file (SMF format 0).

1. Insert the USB flash drive into the Digital Piano's USB flash drive port.

2. While holding down the **FUNCTION** button, press the keyboard key that corresponds to the USB flash drive mode.

- This will cause the L/R lamps to flash.

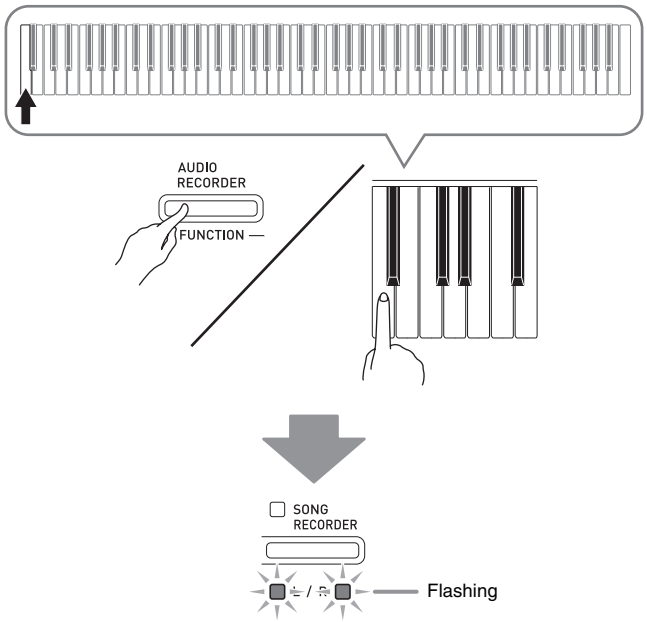

3. While holding down the **FUNCTION** button, press the save keyboard key.

- This will cause the **GRAND PIANO** (**CONCERT**) button lamp to light.

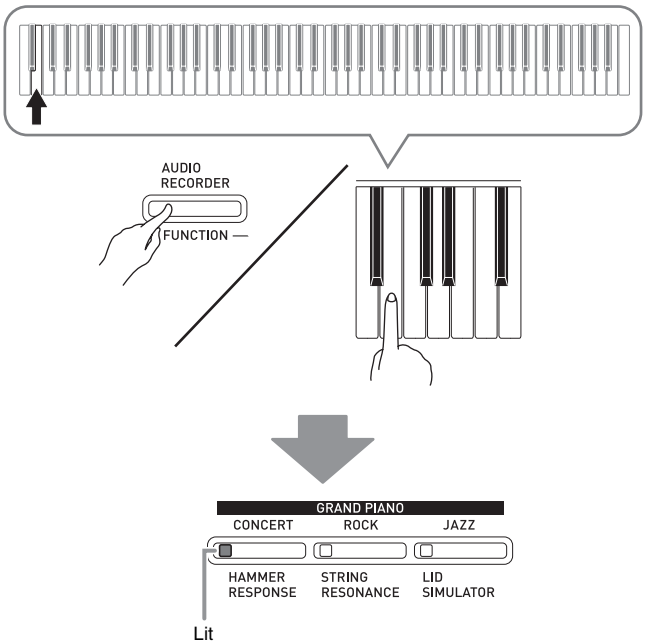

- To exit the data save operation, hold down the **FUNCTION** button as you press the USB flash drive mode key.

4. Hold down the **FUNCTION** button as you use the SONG SELECT keyboard keys to select a song number (61 to 70).

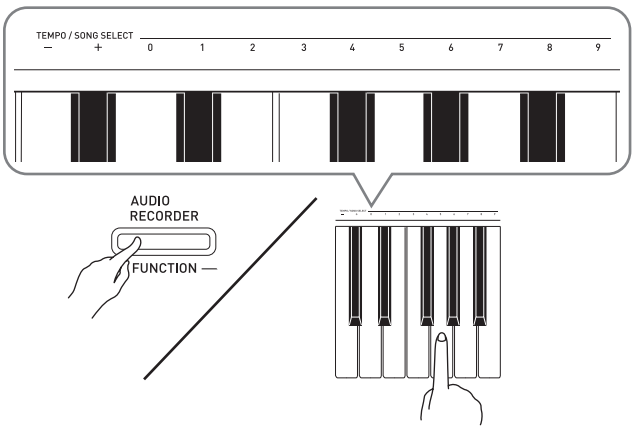

- The Digital Piano will emit a short beep if you specify a correct song number, and a long beep if the song number is not correct.

5. Press the **SONG ▶/■** button.

- This starts the data save operation.
- When saving is complete, the L/R lamps will light to indicate that the USB flash drive mode has been exited.

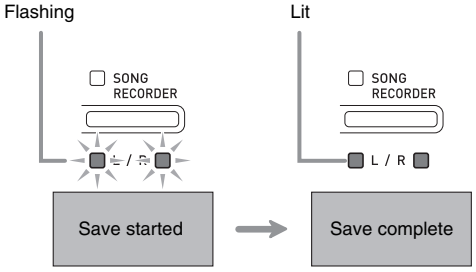

■ USB Flash Drive Data (File) Storage Locations

The above procedure stores piano data in a folder named MUSICLIB on the USB flash drive.

- The MUSICLIB folder is created automatically when you format the USB flash drive on the Digital Piano (page E-28).
- Note that files not in the MUSICLIB folder cannot be loaded or deleted by this Digital Piano.
- The "MUSICLIB" folder contains sub-folders named "61" through "70". Data is saved in the sub-folder whose name corresponds to the song number you specify in step 4 of the procedure above.

Loading Song Data from a USB Flash Drive into Digital Piano Memory

You can use the procedure below to load user song data (page E-36) from a USB flash drive to the Digital Piano's Music Library (song numbers 61 to 70). After that, you can play back the user song or use it for lesson play.

1. On your computer, copy the file you want to load to one of the numbered sub-folders (61 through 70) inside the "MUSICLIB" folder on the USB flash drive.

- The number names of the sub-folders correspond to the Digital Piano's user song numbers (61 to 70).

2. Insert the USB flash drive into the Digital Piano's USB flash drive port.

3. While holding down the **FUNCTION** button, press the keyboard key that corresponds to the USB flash drive mode.

- This will cause the L/R lamps to flash.

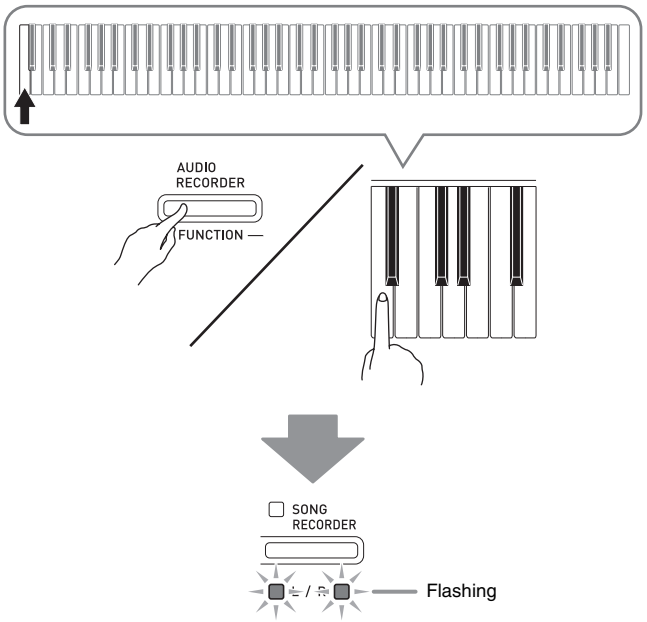

4. While holding down the **FUNCTION** button, press the load keyboard key.

- This will cause the **GRAND PIANO** (**ROCK**) button lamp to light.

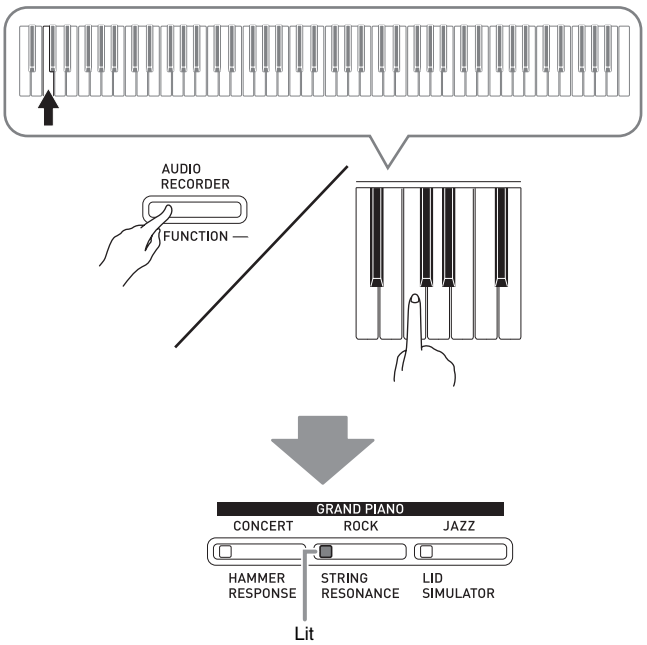

- To cancel the load operation, hold down the **FUNCTION** button as you press the USB flash drive mode key.

5. Hold down the **FUNCTION** button as you use the SONG SELECT keyboard keys to select a song number (61 to 70).

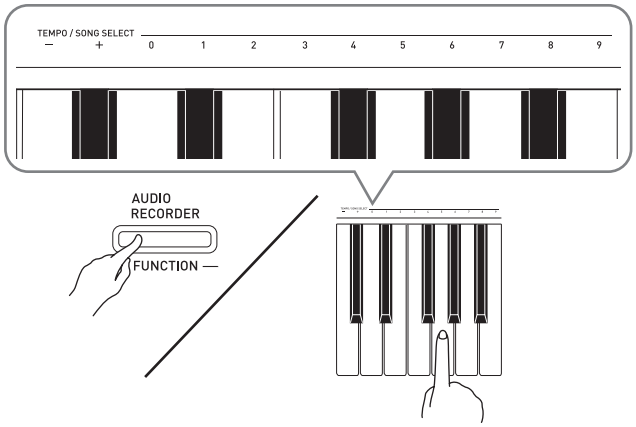

- The Digital Piano will emit a short beep if you specify a correct song number, and a long beep if the song number is not correct.
- Selecting song number 00 will batch load the 10 files from 61 through 70 to the Digital Piano's song memory.

6. Press the **SONG ▶/■** button.

- This starts loading of the data to the Music Library user song area.
- When loading is complete, the L/R lamps will light to indicate that the USB flash drive mode has been exited.

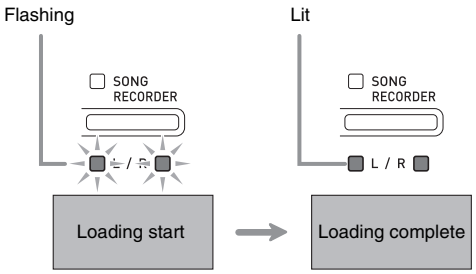

Deleting Data from a USB Flash Drive

You can use the procedure below to delete song data stored in the "MUSICLIB" folder on a USB flash drive.

1. Insert the USB flash drive into the Digital Piano's USB flash drive port.

2. While holding down the **FUNCTION** button, press the keyboard key that corresponds to the USB flash drive mode.

- This will cause the L/R lamps to flash.

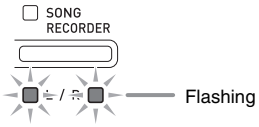

3. While holding down the **FUNCTION** button, press the delete keyboard key.

- This will cause the **GRAND PIANO** (**JAZZ**) button lamp to light.

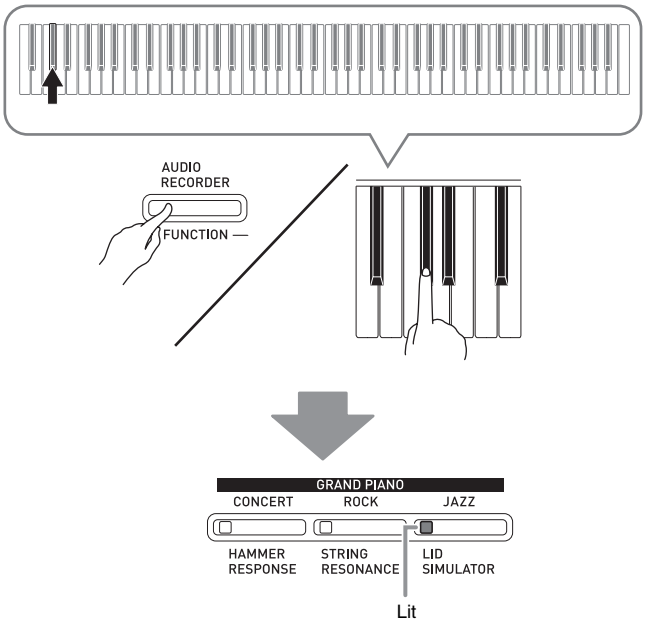

- To exit the data delete operation, hold down the **FUNCTION** button as you press the USB flash drive mode key.

4. Hold down the **FUNCTION** button as you use the SONG SELECT keyboard keys to select a song number (61 to 70).

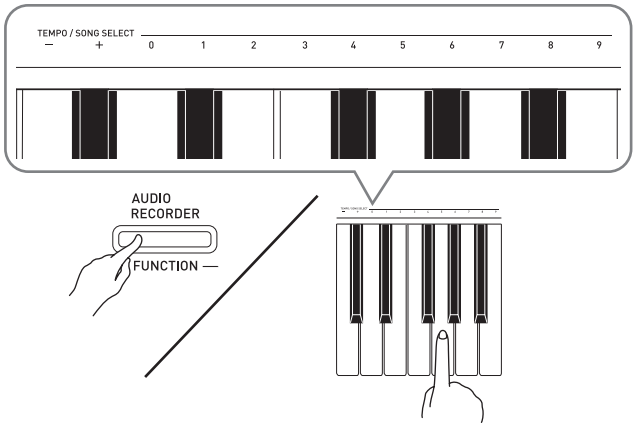

- The Digital Piano will emit a short beep if you specify a correct song number, and a long beep if the song number is not correct.

5. Press the **SONG ▶/■** button.

- This starts deletion of the selected data.
- When deleting is complete, the L/R lamps will light to indicate that the USB flash drive mode has been exited.

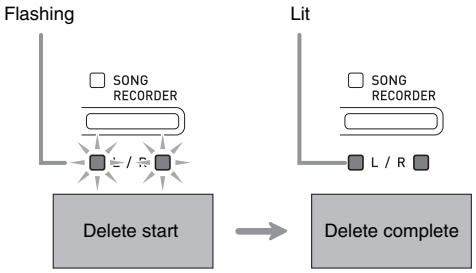

Simple Play Back of a Song on a USB Flash Drive

You can use the procedure below to play back a user song (page E-36) stored on a USB flash drive without loading the song into Digital Piano Music Library memory (song numbers 61 to 70).

1. On your computer, copy the data you want to play back on the Digital Piano into the MUSICLIB folder on the USB flash drive.

- Of the song data in the MUSICLIB folder, you can select any of the first 99 songs, sorted in file name sequence, for playback.

2. Insert the USB flash drive into the Digital Piano's USB flash drive port.

3. While holding down the **FUNCTION** button, press the keyboard key that corresponds to the USB flash drive mode.

- This will cause the L/R lamps to flash.

4. Press the **SONG ▶/■** button.

- This will start playback of the song data.
- Press the **SONG ▶/■** button again to stop playback.

5. To change to another song, hold down the **FUNCTION** button as you use the SONG SELECT plus (+) and minus (–) keyboard keys to select the song you want to hear.

- Pressing the plus (+) or minus (–) key scrolls through song file names.
- You can use the value input keys (0 to 9) to enter a specific two-digit song number.

Example: To select song 08, enter 0 and then 8.

6. To exit the USB flash drive song playback function, hold down the **FUNCTION** button as you press the USB flash drive mode key.

Error Indicators

The following shows how the lamps indicate the error type when an error occurs due to data transfer failure or some other reason.

Lamps	Error Type	Cause	Action
	No Media	1. The USB flash drive is not connected to the Digital Piano's USB flash drive port. 2. The USB flash drive was removed while some operation was in progress. 3. The USB flash drive is write-protected. 4. The USB flash drive has anti-virus software.	1. Correctly plug the USB flash drive into the USB flash drive port. 2. Do not remove the USB flash drive while any operation is in progress. 3. Unprotect the USB flash drive. 4. Use a USB flash drive that does not have anti-virus software.
	No File	There is no loadable file in the "MUSICLIB" folder or no playable file in the "AUDIO" folder.	Move the file you want to load into the "MUSICLIB" folder or the file you want to play into the "AUDIO" folder (pages E-26 and E-29).
	No Data	You are attempting to save data to a USB flash drive when there is no data to save.	Record something before performing a save operation.
	Read Only	A read-only file with the same name you are trying to use is already stored on USB flash drive.	• Change the name and then save the new data. • Remove the read-only attribute from the existing USB flash drive file and overwrite it with the new data. • Use a different USB flash drive.
	Media Full	There is not enough space available on the USB flash drive.	Delete some of the files on the USB flash drive to make room for new data (page E-31) or use a different USB flash drive.
	File Full	1. There are too many files on the USB flash drive. 2. There is a file named TAKE99.WAV in the "AUDIO" folder.	1. Delete some of the files on the USB flash drive to make room for new data. 2. Delete the WAV file in the "AUDIO" folder.
	Not SMF01	You are attempting to play back SMF Format 2 song data.	This Digital Piano supports playback of SMF Format 0 or Format 1 only.
	Size Over	The data on the USB flash drive is too big to play.	This Digital Piano supports playback of song data files with a maximum size of 65 kbytes.
	Wrong Data	1. The USB flash drive data is corrupted. 2. USB flash drive contains data that is not supported by this Digital Piano.	—

Lamps	Error Type	Cause	Action
	Convert	There is not enough Digital Piano memory available to convert a song recorder song to SMF data and store it on the USB flash drive.	Reduce the size of the song data. Example: Delete any tracks that are not required.
	Format	1. The USB flash drive format is not compatible with this Digital Piano. 2. The USB flash drive is corrupted.	1. Format the USB flash drive on the Digital Piano. 2. Use a different USB flash drive.
	Media R/W	The USB flash drive is corrupted.	Use a different USB flash drive.

Connecting to a Computer

You can connect the Digital Piano to a computer and exchange MIDI data between them. You can send play data from the Digital Piano to commercially available music software running on your computer, or you can send MIDI data from your computer to the Digital Piano for playback.

Minimum Computer System Requirements

The following shows the minimum computer system requirements for sending and receiving MIDI data. Check to make sure that your computer complies with these requirements before connecting the Digital Piano to it.

- **Operating System**

Windows® XP (SP2 or later)*1
Windows Vista® *2
Windows® 7*3
Windows® 8 *4
Mac OS® X (10.3.9, 10.4.11, 10.5.X, 10.6.X, 10.7.X, 10.8.X)
*1: Windows XP Home Edition
Windows XP Professional (32-bit)
*2: Windows Vista (32-bit)
*3: Windows 7 (32-bit, 64-bit)
*4: Windows 8 (32-bit, 64-bit)

- **USB port**

IMPORTANT!

- Never connect to a computer that does not conform to the above requirements. Doing so can cause problems with your computer.

Connecting the Digital Piano to Your Computer

IMPORTANT!

- Make sure you follow the steps of the procedure below exactly. Connecting incorrectly can make data send and receive impossible.

1. Turn off the Digital Piano and then start up your computer.

- Do not start up the music software on your computer yet!

2. After starting up your computer, use a commercially available USB cable to connect it to the Digital Piano.

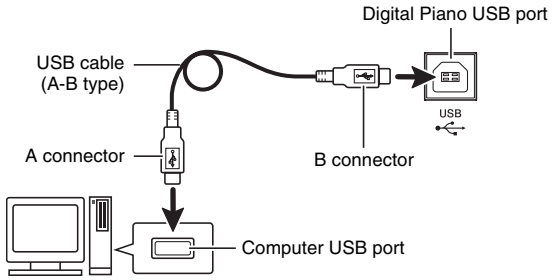

3. Turn on the Digital Piano.

- If this is the first time you are connecting the Digital Piano to your computer, the driver software required to send and receive data will be installed on your computer automatically.

4. Start up commercially available music software on your computer.

5. Configure the music software settings to select one of the following as the MIDI device.

CASIO USB-MIDI : For Windows Vista, Windows 7, Windows 8, Mac OS X
USB Audio Device: For Windows XP

- For information about how to select the MIDI device, see the user documentation that comes with the music software you are using.

IMPORTANT!

- Be sure to turn on the Digital Piano first before starting up your computer's music software.

NOTE

- Once you are able to connect successfully, there is no problem with leaving the USB cable connected when you turn off your computer and/or Digital Piano.
- For detailed specifications and connections that apply to MIDI data send and receive by this Digital Piano, see the latest support information provided by the website at the following URL.
http://world.casio.com/

English

Using MIDI

What is MIDI?

The letters MIDI stand for Musical Instrument Digital Interface, which is the name of a worldwide standard for digital signals and connectors that makes it possible to exchange musical data between musical instruments and computers (machines) produced by different manufacturers.

NOTE

- For detailed information about MIDI Implementation, visit the CASIO website at: http://world.casio.com/.

See "Send channel" and "Local control" on page E-24.

Transferring Song Data with a Computer

Use the procedures in this section to transfer Recorder memory data to a computer for storage, and to load songs to user song memory (Music Library 61 to 70).

IMPORTANT!

- Turning off the Digital Piano while data is being saved or loaded can cause all data currently stored in Digital Piano memory (recorded songs, etc.) to be deleted. Take care so power is not turned off accidentally during data save and load operations. If data is deleted, it will take longer than normal for the Digital Piano to power up the next time you turn it on (page E-4).

1. Perform steps 1 through 3 of the procedure under "Connecting the Digital Piano to Your Computer" on page E-35.

2. Change the Digital Piano's USB device mode to storage.

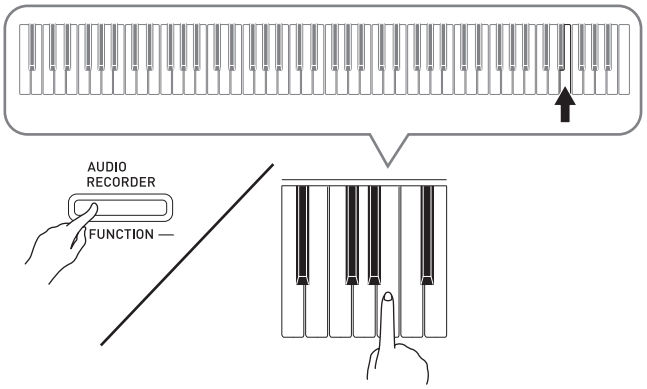

- While holding down the **FUNCTION** button, press the keyboard key that corresponds to the USB device mode.
- After this setting is changed, the **GRAND PIANO** (**CONCERT**, **ROCK**, and **JAZZ**) button lamps flash, and all other lamps are unlit.
- See "USB device mode" on page E-24 for more information.

3. On your computer, perform the required operation to display your computer's storage devices.

If your computer is running this operating system:	Do this:
Windows XP	Double-click "My Computer".
Windows Vista, Windows 7	Double-click "Computer".
Windows 8	Open any folder. On the navigation window, click "Computer".
Mac OS	Skip step 3 and double-click "PIANO" on your Mac desktop.

- The memory of this Digital Piano will appear as "PIANO" under "Devices with Removable Storage".

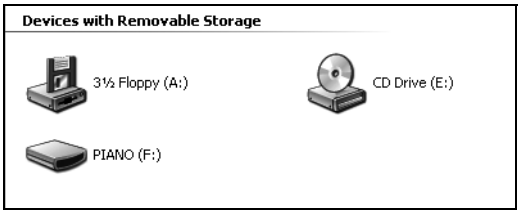

4. Double-click “PIANO”.

- “PIANO” contains folders named “MUSICLIB” and “RECORDER”.
- To transfer a user song to the Digital Piano from your computer, open the “MUSICLIB” folder and put the song into one of the numbered subfolders (61 through 70). Each subfolder corresponds to a Music Library number: Subfolder 61 to Music Library 61, and so on.
- The files in the “RECORDER” folder are songs that have been recorded with the Digital Piano’s recorder function. You can move files from the “RECORDER” folder to another location on your computer, and you can return recorded song files to the Digital Piano by placing them into the “RECORDER” folder.

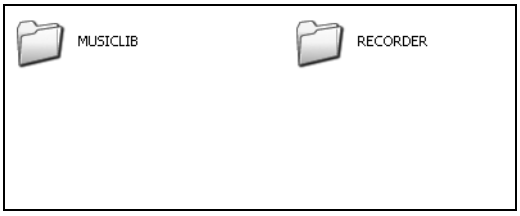

Data Type	Folder Name	File Name and Extension*
User songs	MUSICLIB	.MID: SMF format data (format 0/1) .CM2: CASIO original format data
Recorder memory data	RECORDER	BIDREC01.CSR: CASIO original format data

* Before starting a store or load operation, first check the file name extension to ensure it matches the ones shown in this column.
In the case of a song recorded with the Digital Piano’s recorder function, change its file name to one of the names and extensions shown in this column.

IMPORTANT!

- The initial default configuration for Windows XP, Windows Vista, Windows 7, and Windows 8 is to hide file name extensions. Perform one of the following operations on your computer to show file name extensions.

- To show file name extensions under Windows XP

1. Open the folder you want.
2. On the [Tools] menu, click [Folder Options].
3. Click the [View] tab. In the [Advanced settings] list, clear the check box next to [Hide extensions for known file types].
4. Click [OK].

- To show file name extensions under Windows Vista or Windows 7

1. Open Folder Options by clicking the [Start] button, clicking [Control Panel], clicking [Appearance and Personalization], and then clicking [Folder Options].
2. Click the [View] tab. Under [Advanced settings] clear the [Hide extensions for known file types] check box.
3. Click [OK].

- To show file name extensions under Windows 8

1. Open any folder.
2. Click the [View] menu and then select the [File name extensions] check box in the [Show/hide] group.

■ To load a song into user song memory (Music Library 61 to 70)

1. Open the MUSICLIB folder.
2. Copy the song file (.MID or .CM2) to the number-named subfolder (61 to 70) whose name matches the number of the Music Library location to which you want to load the song.
   - If there are two files with the filename extensions .MID and .CM2 in the MUSICLIB folder, only the .MID data will be loaded into user song memory.

■ To transfer Recorder memory data between the Digital Piano and your computer

To transfer the Digital Piano's current Recorder memory data to your computer, copy the contents of the RECORDER folder to your computer.
To return Recorder data you previously saved to your computer back to Recorder memory, copy it back to the RECORDER folder (and replace the current RECORDER folder contents).

5. After the file copy operation is complete, return the USB device mode to MIDI.

- If you are using a Macintosh, perform the eject operation (drag them to the trash can).
- While holding down the **FUNCTION** button, press the applicable keyboard key. See "USB device mode" on page E-24 for more information.
- Returning the USB device mode to MIDI will load the contents of MUSICLIB into user song memory and the contents of RECORDER into Recorder memory.

IMPORTANT!

- A data conversion error is indicated when both of the **SONG ▶/■** button lamps, and the **GRAND PIANO** (**CONCERT**, **ROCK**, and **JAZZ**) button lamps are all lit, and all other lamps are unlit.

Copyrights

The rights of creators and copyright holders of music, images, computer programs, databases, and other data are protected by copyright laws. You are allowed to reproduce such works for personal or non-commercial use only. For any other purpose, all reproduction (including data format conversion), modification, transfer of reproductions, distribution over a network, or any other use without permission of the copyright holder exposes you to claims for damages and criminal prosecution for copyright infringement and violation of the author's personal rights. Be sure to reproduce and otherwise use copyrighted works only in accordance with applicable copyright laws.

Getting Ready

Assembling the Stand

PREPARATION

- Before starting assembly, check to make sure that you have all the parts shown below.
- This stand does not include any of the tools required for assembly. It is up to you to prepare a large Philips head (+) screwdriver for assembly.

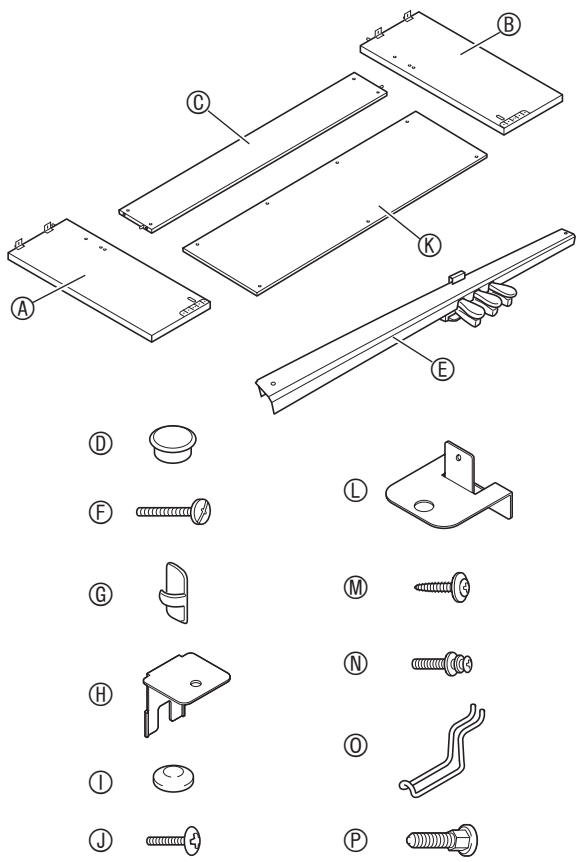

Ⓐ Side panel	×1	Ⓘ Screw caps	×2
Ⓑ Side panel	×1	Ⓙ Screws	×4
Ⓒ Back board	×1	Ⓚ Back board	×1
Ⓓ Screw caps	×6	Ⓛ Brackets	×2
Ⓔ Pedal unit	×1	Ⓜ Screws	×4
Ⓕ Screws	×2	Ⓝ Screws	×3
Ⓖ Clips	×2	Ⓞ Headphones hook	×1
Ⓗ Brackets	×2	Ⓟ Screw	×1

IMPORTANT!

- Do not use any screws other than those that come with the stand. Doing so risks damage to the stand and/or Digital Piano.
- You can find the screws in a plastic bag inside of the packing material.
- If anything is missing or damaged, contact your local CASIO service provider.

⚠CAUTION

- The stand should be assembled by two people working together.
- The stand should be assembled on a flat surface.
- Do not remove the tape securing the keyboard cover in place until assembly is complete. Removing the tape can cause the keyboard cover to open and close during assembly, creating the risk of personal injury to your hands and fingers.
- Take care that you do not pinch your fingers between parts when assembling them.
- When placing the Digital Piano on the floor, be sure to place it on something soft (a blanket, cushion, etc.). Do not place the Digital Piano directly onto the floor.

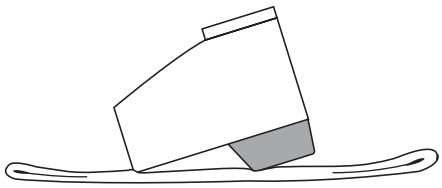

NOTE

- Be sure to follow the proper procedure when assembling the stand.

PREPARATION

- Pull the pedal unit cable out from the pedal unit Ⓔ.

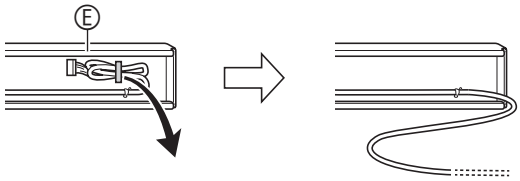

1. Remove the four screws (two on each end) from back board Ⓒ.

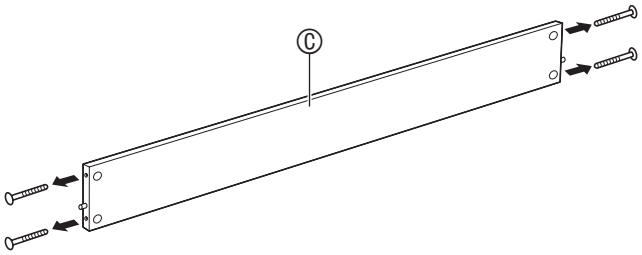

2. Attach side panels Ⓐ and Ⓑ to back board Ⓒ. Secure side panels Ⓐ and Ⓑ to the back board Ⓒ using the screws you removed in step 1.

- Attach the side panels so the side of the back board Ⓒ where the joint connectors are inserted is facing towards the back of the stand.
- If you have trouble inserting a screw into a joint connector screw hole, use a screwdriver to adjust the joint connector by rotating it.

IMPORTANT!

Joint connectors

- When inserting a screw into a joint connector, keep your finger on the joint connector hole on the back of back board Ⓒ to make sure the joint connector does not come out of the hole.

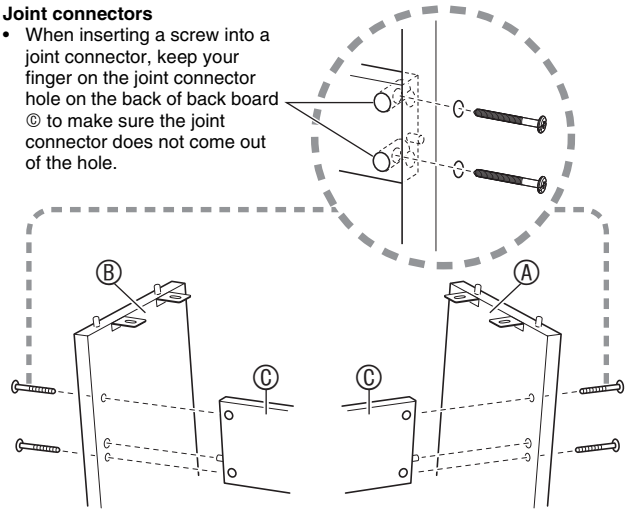

3-1. If you plan to locate the piano and stand where it is not against a wall, you need to extend the anti-tip brackets at the base of side panels Ⓐ and Ⓑ. Remove the two screws (one on the outside of each side panel) that hold the brackets, and then slide the brackets as shown in the illustration. After extending the anti-tip brackets, reinstall the screws that secure them in place, but do not tighten the screws fully at this time.

[Inside of side panels]

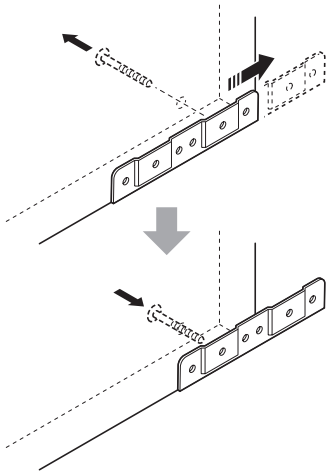

3-2. If you plan to locate the piano and stand against a wall, loosen the two screws (one on the outside of each side panel) that secure the brackets. You do not need to remove the screws in this case.

- In this case, you do not need to remove the screws. Just loosen them.

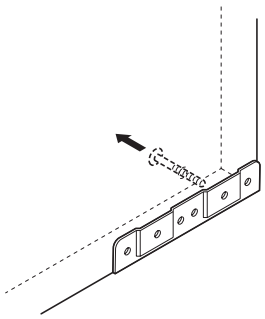

4. Insert angle brackets Ⓗ into the gap between the anti-tipping bracket and the side panel.

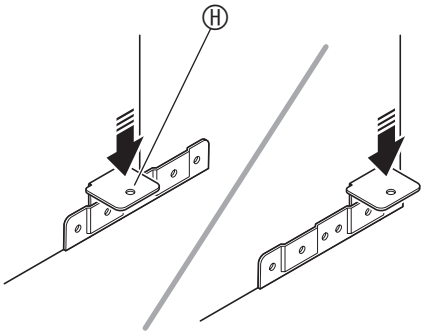

5. From the outside of side panels Ⓐ and Ⓑ, temporarily tighten the screws you loosened in step 3, above.

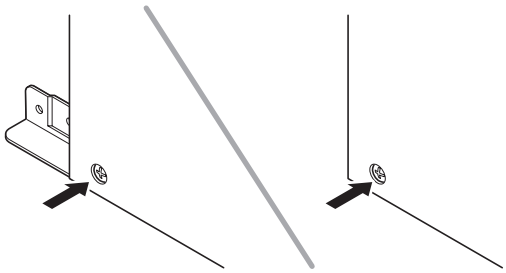

6. Mount pedal unit Ⓔ onto angle brackets Ⓗ, which you installed in step 5, above.

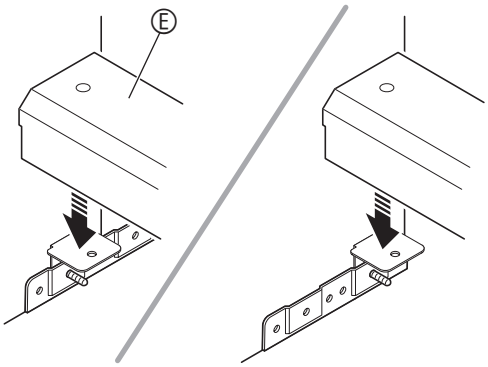

7. Mount brackets Ⓛ onto both ends of the pedal unit Ⓔ.

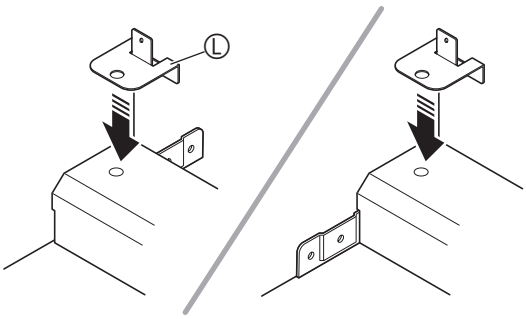

8. Use the screws Ⓕ to securely fix the brackets Ⓛ to the pedal unit Ⓔ.

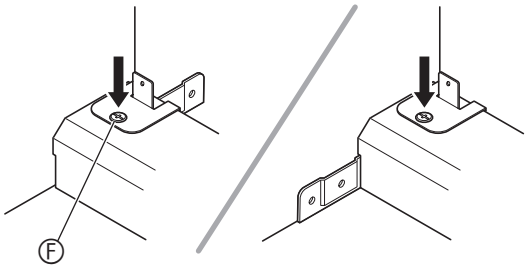

9. After adjusting the position (height) of pedal unit Ⓔ, fully tighten the screws that you temporarily tightened in step 5, above.

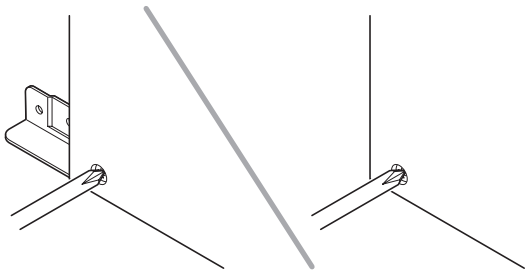

10. Secure the back board Ⓚ to the back board Ⓒ.

- Screw the screws Ⓜ into the four holes in the back board Ⓚ.

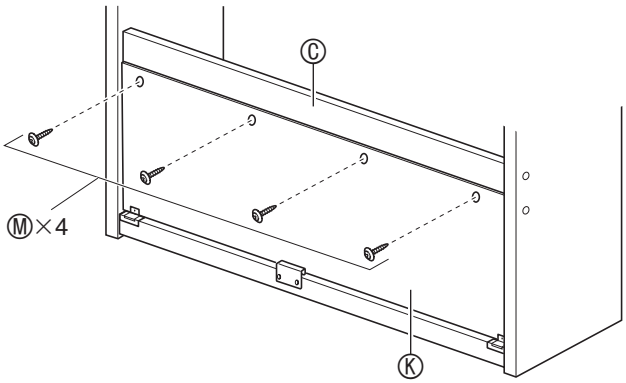

11. Go around to the front of the Digital Piano and securely tighten the three screws Ⓝ shown in the illustration below.

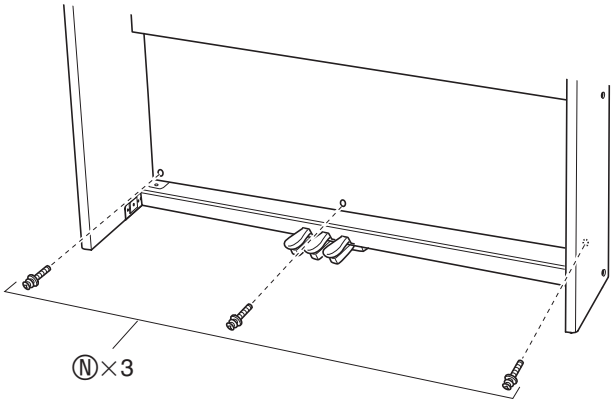

12. Mount the piano onto the stand. Position the piano so the dowels on the top edges of side panels Ⓐ and Ⓑ enter the dowel holes on the bottom of the piano.

- Note that there is nothing anchoring the piano to the stand at this time. Take care to ensure that the piano does not fall off the stand.

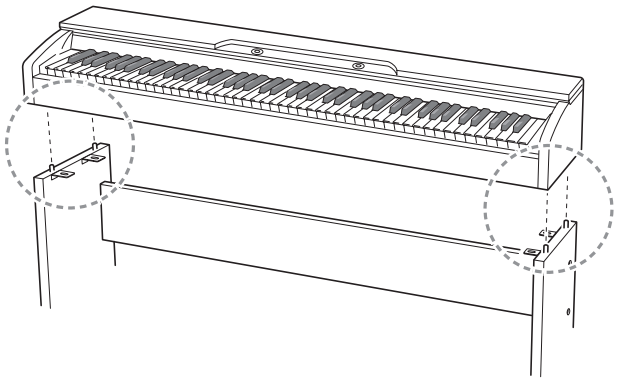

IMPORTANT!

- After mounting the piano onto the stand, check to make sure the sides of the piano and the side panels of the stand are position relative to each other as shown in the nearby illustration.

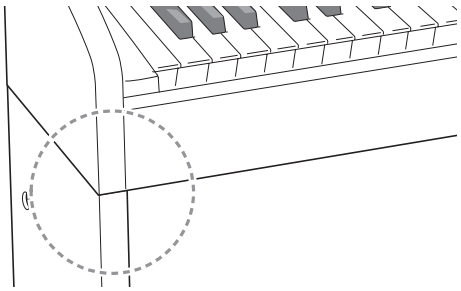

13. Use the screws Ⓙ to securely fix the brackets at the top of side panels Ⓐ and Ⓑ to the bottom of the piano.

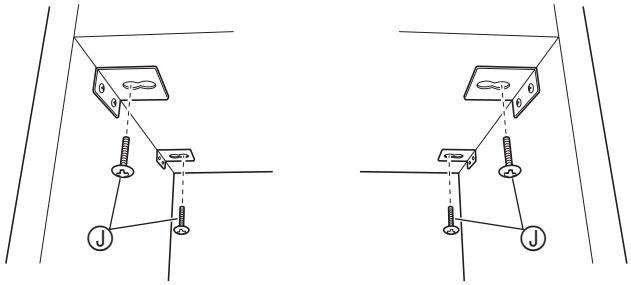

14. After checking to make sure the six screws that secure side panels Ⓐ and Ⓑ are fully tightened, cover the heads of the screws with screw caps Ⓓ.

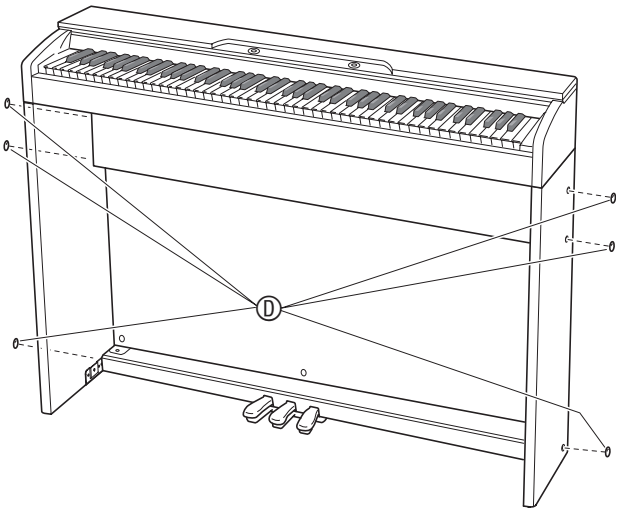

15. With the two screw caps Ⓘ, cover the heads of the screws that you fully tightened in step 8.

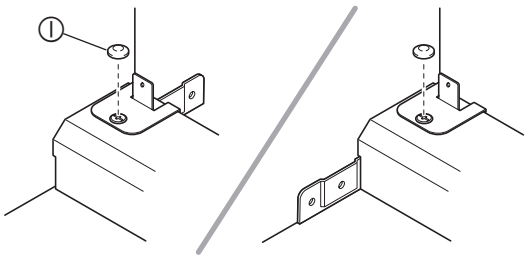

16. Install the headphones hook ⓪.

(16-1) Insert the headphones hook ⓪ into the two holes on the bottom of the piano.

(16-2) Use the screw Ⓟ to secure the headphones hook in place.

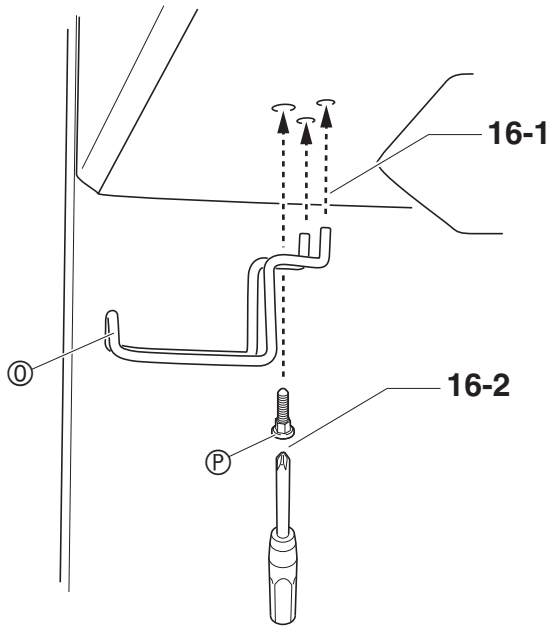

To connect the cable

1. Making sure that the pedal unit cable plug is oriented as shown in the illustration below, plug it into the pedal connector on the bottom of the piano.

a. Press the plug fully into the connector as far as it will go.

b. Use the clips Ⓖ to secure the pedal cable to two locations on side panel Ⓑ.

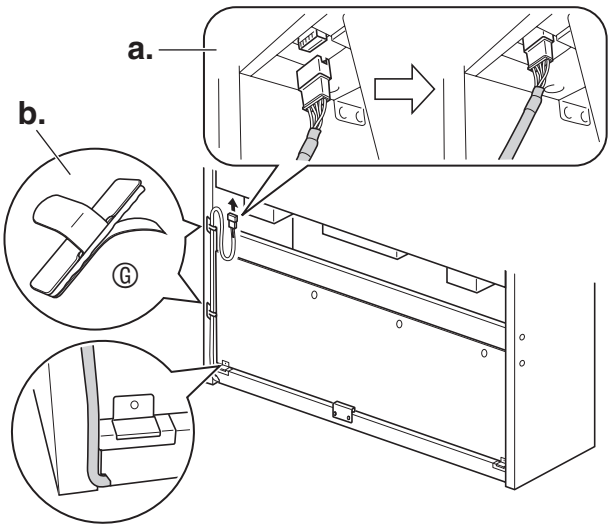

2. Insert the plug of the AC adaptor that comes with the Digital Piano into its power terminal (**DC 24V**).

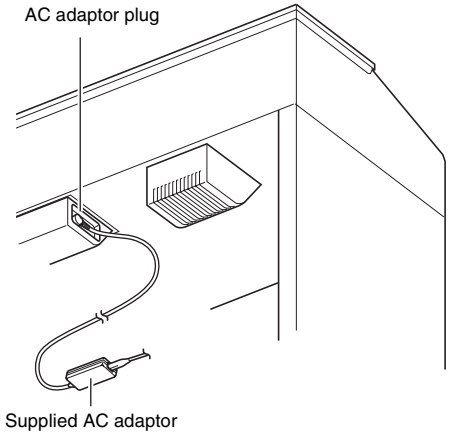

3. Plug the power cord of the AC adaptor that comes with the Digital Piano into a household power outlet as shown in the illustration below.

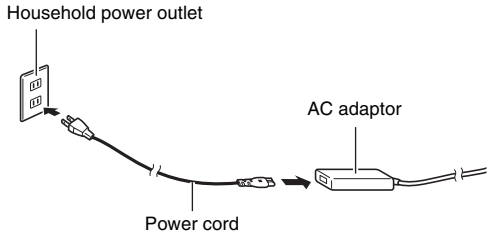

To install the music stand

1. Install the music stand by inserting its pegs into the holes in the top of the piano.

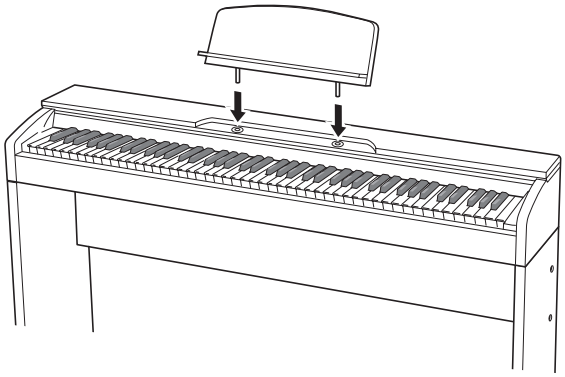

Opening and Closing the Piano Lid

IMPORTANT!

- Use both hands whenever opening or closing the lid, and take care that you do not close it on your fingers.
- Do not open the lid too wide. Doing so creates the risk of damage to the cover and Digital Piano.
- Stand in front of the Digital Piano on the right side when opening or closing the lid.

To open the lid

1. Lift up the lid as shown in the illustration.

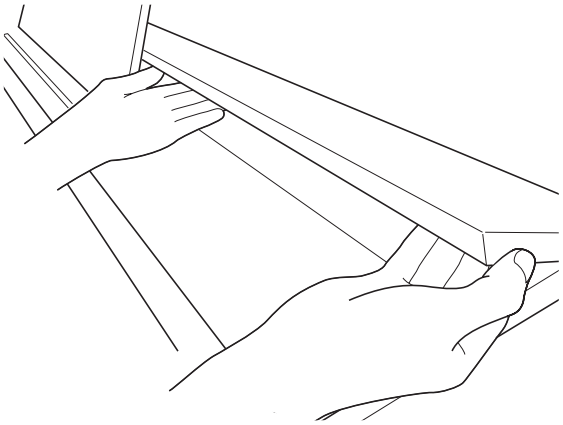

- The lid has a support bracket (indicated by the star ★ in the illustration) attached to its inside surface. Check to make sure that the support bracket is standing up fully.

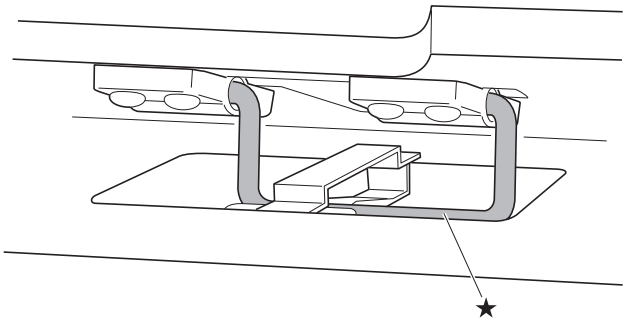

To close the lid

1. Carefully lift up slightly on the lid.
2. Use the fingers of your left hand to press back on the support bracket (★) as you slowly and carefully lower the lid.

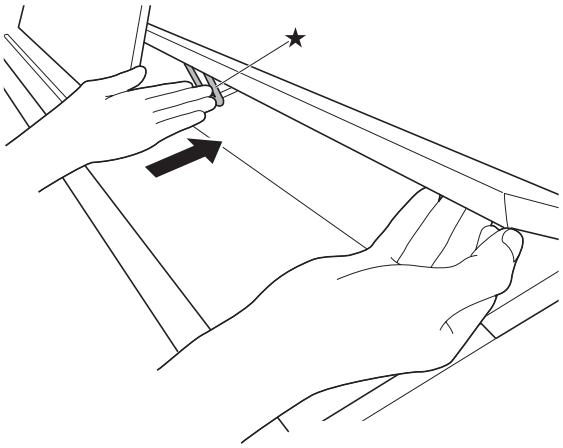

Power Outlet

Your Digital Piano runs on standard household power. Be sure to turn off power whenever you are not using the Digital Piano.

Using an AC Adaptor

Use only the AC adaptor (JEITA Standard, with unified polarity plug) that comes with this Digital Piano. Use of a different type of AC adaptor can cause malfunction of the Digital Piano.

Specified AC Adaptor: AD-E24250LW

- Use the supplied power cord to connect the AC adaptor.

■ About the AC adaptor that comes with the Digital Piano

Note the following important precautions to avoid damage to the AC adaptor and power cord.

- Never pull on the cord with excessive force.
- Never repeatedly pull on the cord.
- Never twist the cord at the base of the plug or connector.
- Before moving the Digital Piano, be sure to unplug the AC adaptor from the power outlet.
- Loop and bundle the power cord, but never wind it around the AC adaptor.

IMPORTANT!

- Never connect the AC adaptor that comes with this Digital Piano to any other device besides this Digital Piano. Doing so creates the risk of malfunction.
- Make sure the Digital Piano is turned off before plugging in or unplugging the AC adaptor.
- The AC adaptor will become warm to the touch after very long use. This is normal and does not indicate malfunction.
- Use the AC adaptor so its label surface is pointed downwards. The AC adaptor becomes prone to emitting electromagnetic waves when the label surface is facing upwards.

Connecting Headphones

Front

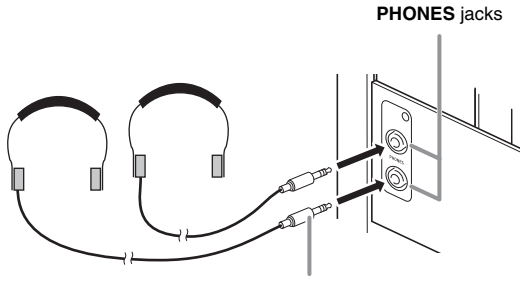

Connect commercially available headphones to the **PHONES** jacks. Connecting headphones to either of the **PHONES** jack cuts off output to the speakers, which means you can practice even late at night without bothering others. To protect your hearing, make sure that you do not set the volume level too high when using headphones.

NOTE

- Be sure to push the headphones plug into the **PHONES** jacks as far as it will go. If you don't, you may hear sound from only one side of the headphones.
- If the plug of the headphones you are using does not match the **PHONES** jacks, use the applicable commercially available adaptor plug.
- If you are using headphones that require an adaptor plug, make sure you do not leave the adaptor plugged in when you unplug the headphones. If you do, nothing will sound from the speakers when you play.

Connecting Audio Equipment or an Amplifier

You can connect audio equipment or a music amplifier to the Digital Piano and then play through external speakers for more powerful volume and better sound quality.

IMPORTANT!

- The Digital Piano automatically adjusts sound output to optimize for headphone output (when headphones are connected) or built-in speaker output (when headphones are not connected). This also will cause a change in the output quality from the Digital Piano's **LINE OUT R** and **L/MONO** jacks.
- Whenever connecting a device to the Digital Piano, first use the **VOLUME** controller to set the volume to a low level. After connecting, you can adjust the volume to the level you want.
- Whenever you connect any device to the Digital Piano, be sure to read the user documentation that comes with the device.

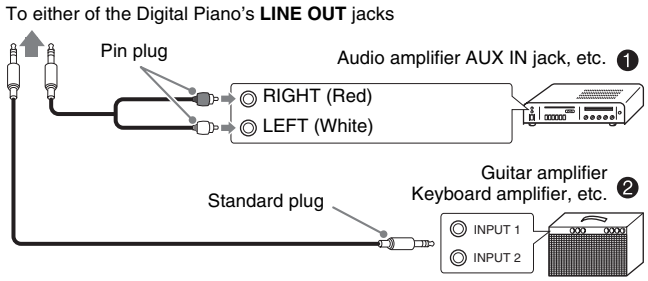

Connecting to Audio Equipment ❶

Use commercially available cables to connect the external audio equipment to the Digital Piano's **LINE OUT** jacks as shown in Figure ❶. **LINE OUT R** jack output is right channel sound, while **LINE OUT L/MONO** jack output is left channel sound. It is up to you to purchase connecting cables like the ones shown in the illustration for connection of audio equipment. Normally in this configuration you must set the audio equipment's input selector to the setting that specifies the terminal (such as AUX IN) to which the piano is connected. Use the Digital Piano's **VOLUME** controller to adjust the volume level.

Connecting to a Musical Instrument Amplifier ❷

Use commercially available cables to connect the amplifier to the Digital Piano's **LINE OUT** jacks as shown in Figure ❷. **LINE OUT R** jack output is right channel sound, while **LINE OUT L/MONO** jack output is left channel sound. Connecting to the **LINE OUT L/MONO** jack only outputs a mixture of both channels. It is up to you to purchase connecting cable like the one shown in the illustration for connection of the amplifier. Use the Digital Piano's **VOLUME** controller to adjust the volume level.

IMPORTANT!

- When using the **LINE OUT** jacks, also connect headphones to the **PHONES** jack. This will switch the LINE OUT output to appropriate sound quality.

Bundled and Optional Accessories

Use only accessories that are specified for use with this Digital Piano.
Use of unauthorized accessories creates the risk of fire, electric shock, and personal injury.

NOTE

- You can get information about accessories that are sold separately for this product from the CASIO catalog available from your retailer, and from the CASIO website at the following URL.
  http://world.casio.com/

Reference

Troubleshooting

Problem	Cause	Action	See Page
No sound is produced when I press a keyboard key.	1. The **VOLUME** controller is set to "MIN". 2. Headphones or an adaptor plug is plugged into one of the **PHONES** jacks. 3. MIDI Local control is turned off.	1. Rotate the **VOLUME** controller more towards "MAX". 2. Disconnect whatever is connected to the **PHONES** jacks. 3. Turn on the Local control setting.	☞ E-5 ☞ E-45 ☞ E-24
The pitch of the Digital Piano is off.	1. The Digital Piano's key setting is something other than "440.0Hz". 2. Digital Piano tuning is incorrect. 3. Octave shift is enabled. 4. A non-standard temperament setting is being used.	1. Change the key setting to "440.0Hz", or turn Digital Piano power off and then back on again. 2. Adjust Digital Piano tuning, or turn the Digital Piano off and then back on again. 3. Change the octave shift setting to 0. 4. Change the temperament setting to "00: Equal", which is the standard modern tuning.	☞ E-24 ☞ E-24 ☞ E-24 ☞ E-24
Nothing happens when I press a pedal.	1. The pedal unit cable is not connected. 2. The pedal unit cable plug is not plugged in completely.	1. Connect the cable correctly. 2. Make sure that the pedal unit cable plug is inserted as far as it will go into the pedal connector on the bottom of the digital piano.	☞ E-43
Tones and/or effects sound strange. Turning power off and then back on again does not eliminate the problem. *Example:* **Note intensity does not change even though I alter key pressure.**	The "Back up" feature is turned on.	Turn off "Back up". Next, turn power off and then back on again.	☞ E-25
I cannot transfer data after connecting the Digital Piano to a computer.	–	1. Check to make sure that the USB cable is connected to the Digital Piano and computer, and that the correct device is selected with your computer's music software. 2. Turn off the Digital Piano and then exit the music software on your computer. Next, turn the Digital Piano back on and then restart the music software on your computer.	☞ E-35
I cannot store data to a USB flash drive or load data from a USB flash drive.	–	See "Error Indicators".	☞ E-33
It takes a long time before I can use the Digital Piano after I turn it on.	Digital Piano memory data was corrupted because a data transfer operation with a computer was in progress the last time you turned off the Digital Piano. When this happens, the Digital Piano performs a memory format operation the next time you turn it on. You cannot perform any other operation while a format operation is in progress.	It takes about 20 seconds after you turn on power to perform the memory format operation. Wait until the format operation is complete. Note that you should take care to avoid turning off the Digital Piano while a data transfer operation with a computer is in progress.	☞ E-36
A tone's quality and volume sounds slightly different depending where it is played on the keyboard.	This is an unavoidable result of the digital sampling process,* and does not indicate malfunction. * Multiple digital samples are taken for the low range, middle range, and high range of the original musical instrument. Because of this, there may be very slight differences in tonal quality and volume between sample ranges.		
When I press a button, the note that is sounding cuts out momentarily or there is a slight change in how effects are applied.	This happens when the sounds of multiple parts are sounding at the same time while using layer, using the Duet Mode, playing back a built-in tune, recording, etc. Pressing a button when one of these conditions exists will cause the effect setting that is built into the tone to change automatically, which causes notes to cut out momentarily or causes a slight change in how effects are being applied.		

Problem	Cause	Action	See Page
There are knots, saw blade marks, and/or other marks on the finish of the Digital Piano.	The finish of the Digital Piano has been designed to faithfully reproduce the appearance of natural wood, including cuts and other marks in the wood. Though knots, saw blade marks, and/or other marks may be visible on the finish, they are not actual cracks or scratches. Such marks will not cause any problems with the use of your Digital Piano.		

Product Specifications

Model	PX-A800BN
Keyboard	88-key piano keyboard, with Touch Response
Maximum Polyphony	256 notes
Tones	18 • Layer (excluding bass tone) • Split (Low-range bass tone only)
Effects	Brilliance (–3 to 0 to 3), Hall simulator (10 types), Chorus (4 types), DSP, Damper Resonance, Hammer response, String resonance, Lid simulator, Key Off Simulator
Metronome	• Beats: 0, 2, 3, 4, 5, 6 • Tempo Range: 20 to 255
Duet	Adjustable tone range (–1 to 2 octaves)
Music Library	• Number of Songs: 60, User Songs: 10 (Up to approximately 90KB per song, approximately 900KB for 10 songs)* * Based on 1KB = 1024 bytes, 1MB = 1024^2 bytes • Song volume: Adjustable • Part On/Off: L, R
Song Recorder	• Functions: Real-time recording, playback • Number of Song: 1 • Number of Tracks: 2 • Capacity: Approximately 5,000 notes total • Recorded Data Protection: Built-in flash memory
Audio Recorder	• Real-time recording and playback to USB flash drive* * Linear PCM, 16bit, 44.1 kHz, stereo .WAV format • Songs: 99 files • Approximately 25 minutes maximum recording per file.
Pedals	Damper (with half-pedal operation), Soft, Sostenuto
Other Functions	• Touch Select: 3 types, Off • Transpose: 2 octaves (–12 to 0 to 12) • Tuning: 415.5Hz to 440.0Hz to 465.9Hz (variable) • Temperament • Octave shift • Operation Lock
MIDI	16-channel multi-timbre receive
USB Flash Drive	• Capacity: 32GB or less recommended • Supported Functions: SMF playback, data storage, data loading, USB flash drive format, delete data, play back of audio data
Inputs/Outputs	• **PHONES** jacks: Stereo standard jacks × 2 • Power: 24V DC • **LINE OUT R, L/MONO** jacks: Standard jacks × 2 Output impedance: 2.3KΩ Output voltage: 1.8V (RMS) MAX • USB port : Type B • USB flash drive port : Type A • Pedal connector
Speakers	ϕ12cm × 2 + ϕ5cm × 2 (Output 20W + 20W)
Power Requirements	AC Adaptor: AD-E24250LW • Auto Power Off: Approximately 4 hours after last operation. Auto Power Off can be disabled. • The AC adaptor can be used safely in areas up to 3,000 meters above sea level.
Power Consumption	24V ⎓ 20W
Dimensions	Digital Piano and Stand: 136.7 (W) × 29.9 (D) × 83.7 (H) cm (53 7/8 × 11 3/4 × 32 15/16 inch)
Weight	Digital Piano and Stand: approximately 35.5kg (78.3 lbs)

• Specifications and designs are subject to change without notice.

Operating Precautions

Be sure to read and observe the following operating precautions.

■ Location

Avoid the following locations for this product.

- Areas exposed to direct sunlight and high humidity
- Areas subjected to temperature extremes
- Near a radio, TV, video deck, or tuner
  The above devices will not cause malfunction of the product, but the product can cause interference in the audio or video of a nearby device.

■ User Maintenance

- Never use benzine, alcohol, thinner, or other chemical agents to clean the product.
- To clean the product or its keyboard, wipe with a soft cloth moistened in a weak solution of water and a mild neutral detergent. Wring all excess moisture from the cloth before wiping.

■ Included and Optional Accessories

Use only accessories that are specified for use with this product. Use of unauthorized accessories creates the risk of fire, electric shock, and personal injury.

■ Digital Piano Finish

The finish of the Digital Piano has been designed to faithfully reproduce the appearance of natural wood, including cuts and other marks in the wood. Though knots, saw blade marks, and/or other marks may be visible on the finish, they are not actual cracks or scratches. Such marks will not cause any problems with the use of your Digital Piano.

■ Weld Lines

Lines may be visible on the exterior of the product. These are “weld lines” that result from the plastic molding process. They are not cracks or scratches.

■ Musical Instrument Etiquette

Always be aware of others around you whenever using this product. Be especially careful when playing late at night to keep the volume at levels that do not disturb others. Other steps you can take when playing late at night are closing the window and using headphones.

- Any reproduction of the contents of this manual, either in part or its entirety, is prohibited. Except for your own, personal use, any other use of the contents of this manual without the consent of CASIO is prohibited under copyright laws.
- IN NO EVENT SHALL CASIO BE LIABLE FOR ANY DAMAGES WHATSOEVER (INCLUDING, WITHOUT LIMITATION, DAMAGES FOR LOSS OF PROFITS, BUSINESS INTERRUPTION, LOSS OF INFORMATION) ARISING OUT OF THE USE OF OR INABILITY TO USE THIS MANUAL OR PRODUCT, EVEN IF CASIO HAS BEEN ADVISED OF THE POSSIBILITY OF SUCH DAMAGES.
- The contents of this manual are subject to change without notice.

■ AC Adaptor Handling Precautions

- Use a power outlet that is easily accessible so you can unplug the AC adaptor when a malfunction occurs or whenever else you need to do so.
- The AC adaptor is intended for indoor use only. Do not use it where it might be exposed to splashing or moisture. Do not place any container, such as a flower vase, that contains liquid on the AC adaptor.
- Store the AC adaptor in a dry place.
- Use the AC adaptor in an open, well-ventilated area.
- Never cover the AC adaptor with newspaper, a table cloth, a curtain, or any other similar item.
- Unplug the AC adaptor from the power outlet if you do not plan to use the Digital Piano for a long time.
- Never try to repair the AC adaptor or modify it in any way.
- AC adaptor operating environment
  Temperature: 0 to 40°C
  Humidity: 10% to 90% RH
- Output polarity: ⊖—◐—⊕

AC Adaptor Handling Precautions

Model: AD-E24250LW

1. Read these instructions.
2. Keep these instructions on hand.
3. Heed all warnings.
4. Follow all instructions.
5. Do not use this product near water.
6. Clean only with a dry cloth.
7. Do not install near radiators, heat registers, stoves, or any other source of heat (including amplifiers).
8. Use only attachments and accessories specified by the manufacturer.
9. Refer all servicing to qualified service personnel. Servicing is required after any of the following occurs: when the product is damaged, when the power supply cord or plug is damaged, when liquid is spilled into the product, when a foreign object falls into the product, when the product is exposed to rain or moisture, when the product does not operate normally, when the product is dropped.
10. Do not allow the product to be exposed to dripping or splashing liquid. Do not place any object containing liquid on the product.
11. Do not allow the electrical load output to exceed the label rating.
12. Make sure the surrounding area is dry before plugging into a power source.
13. Make sure the product is oriented correctly.
14. Unplug the product during lightning storms or when you do not plan to use it for a long time.
15. Do not allow product ventilation openings to become blocked. Install the product in accordance with the manufacturer's instructions.
16. Take care the power cord is located where it will not be stepped upon or bent severely, particularly in locations close to plugs and convenience receptacles, and in locations where it exits from the product.
17. The AC adaptor should be plugged into a power outlet as close to the product as possible to allow immediate disconnection of the plug in case of emergency.

The symbol below is an alert indicating un-insulated hazardous voltage inside the product's enclosure, which may be sufficient to constitute the risk of electric shock to users.

The symbol below is an alert indicating the presence of important operating and maintenance (servicing) instructions in the documentation that accompanies the product.

Appendix/Apéndice

Tone List/Lista de tonos

Tone Name/ Nombre de tonos	Program Change/ Cambio de programa	Bank Select MSB/ MSB de selección de banco
GRAND PIANO CONCERT	0	0
GRAND PIANO ROCK	0	1
GRAND PIANO JAZZ	0	2
GRAND PIANO CLASSIC	0	3
GRAND PIANO POP	0	4
GRAND PIANO DANCE	0	5
GRAND PIANO LA	0	6
GRAND PIANO MELLOW	0	7
GRAND PIANO BRIGHT	0	8
(GRAND PIANO) PIANO PAD	0	9
ELEC PIANO	4	0
FM E.PIANO	5	0
60'S E.PIANO	4	1
DYNO E.PIANO	4	2
STRINGS	49	0
PIPE ORGAN	19	0
JAZZ ORGAN	17	0
BASS (LOWER)	32	0

Song List/Lista de canciones

No./N°	Song Name/Nombre de canciones
01	Nocturne Op.9-2
02	Fantaisie-Impromptu Op.66
03	Étude Op.10-3 “Chanson de l’adieu”
04	Étude Op.10-5 “Black Keys”
05	Étude Op.10-12 “Revolutionary”
06	Étude Op.25-9 “Butterflies”
07	Prélude Op.28-7
08	Valse Op.64-1 “Petit Chien”
09	Valse Op.64-2
10	Moments Musicaux 3
11	Impromptu Op.90-2
12	Marche Militaire 1 (Duet)
13	Frühlingslied [Lieder Ohne Worte Heft 5]
14	Fröhlicher Landmann [Album für die Jugend]
15	Von fremden Ländern und Menschen [Kinderszenen]
16	Träumerei [Kinderszenen]
17	Tambourin
18	Menuet BWV Anh.114 [Clavierbüchlein der Anna Magdalena Bach]
19	Inventio 1 BWV 772
20	Inventio 8 BWV 779
21	Inventio 13 BWV 784
22	Praeludium 1 BWV 846 [Das Wohltemperierte Klavier 1]
23	Le Coucou
24	Gavotte
25	Sonatina Op.36-1 1st Mov.
26	Sonatine Op.20-1 1st Mov.
27	Sonate K.545 1st Mov.
28	Sonate K.331 3rd Mov. “Turkish March”
29	Rondo K.485
30	Für Elise
31	Marcia alla Turca
32	Sonate Op.13 “Pathétique” 1st Mov.
33	Sonate Op.13 “Pathétique” 2nd Mov.
34	Sonate Op.13 “Pathétique” 3rd Mov.
35	Sonate Op.27-2 “Moonlight” 1st Mov.
36	Rhapsodie 2
37	Waltz Op.39-15 (Duet)
38	Liebesträume 3
39	Blumenlied
40	La Prière d’une Vierge
41	Csikos Post
42	Humoresque Op.101-7
43	Melodie [Lyrische Stücke Heft 2]
44	Sicilienne Op.78
45	Berceuse [Dolly] (Duet)
46	Arabesque 1
47	La Fille aux Cheveux de Lin [Préludes]
48	Passepied [Suite bergamasque]
49	Gymnopédie 1
50	Je Te Veux
51	Salut d’Amour
52	The Entertainer
53	Maple Leaf Rag
54	L’arabesque [25 Etüden Op.100]
55	La Styrienne [25 Etüden Op.100]
56	Ave Maria [25 Etüden Op.100]
57	Le retour [25 Etüden Op.100]
58	La chevaleresque [25 Etüden Op.100]
59	No.13 [Études de Mécanisme Op.849]
60	No.26 [Études de Mécanisme Op.849]

Model PX-A800 **Version : 1.0**

MIDI Implementation Chart

Function		Transmitted	Recognized	Remarks
Basic Channel	Default Changed	1 - 16 1 - 16	1 - 16 1 - 16	
Mode	Default Messages Altered	Mode 3 X ✻ ✻ ✻ ✻ ✻ ✻ ✻	Mode 3 X ✻ ✻ ✻ ✻ ✻ ✻ ✻	
Note Number	 True voice	0 - 127 ✻ ✻ ✻ ✻ ✻ ✻ ✻	0 - 127 0 - 127*1	*1 : Depends on tone *1 : Depende del tono
Velocity	Note ON Note OFF	O 9nH v = 1 - 127 O 8nH v = 0 - 127	O 9nH v = 1 - 127 X 9nH v = 0, O 8nH v = 0 - 127	
After Touch	Key's Ch's	X X	X O	
Pitch Bender		X	O	
Control Change	0, 32 1 5 6, 38 7 10 11 16 17 18 19 64 65 66 67	O X X X O X X X X X X O X O O	O O O O O O O O O O O O O O O	Bank select Modulation Portamento Time Data entry LSB, MSB*2 Volume Pan Expression DSP Parameter0*2 DSP Parameter1*2 DSP Parameter2*2 DSP Parameter3*2 Damper Portamento Switch Sostenuto Soft pedal

76	X	O	Vibrato rate
77	X	O	Vibrato depth
78	X	O	Vibrato delay
80	X	O	DSP Parameter4*2
81	X	O	DSP Parameter5*2
82	X	O	DSP Parameter6*2
83	X	O	DSP Parameter7*2
84	X	O	Portamento Control
88	O	O	High resolution velocity prefix
91	X	O	Reverb send*3
93	O	O	Chorus send
100, 101	X	O	RPN LSB, MSB*2
120	X	O	All sound off
121	O	O	Reset all controller
Program Change :True #	O ✻ ✻ ✻ ✻ ✻ ✻ ✻	O 0 - 127	
System Exclusive	O	O	*2
System Common : Song Pos : Song Sel : Tune	X X X	X X X	
System Real Time : Clock : Commands	O O	X X	
Aux Messages : Local ON/OFF : All notes OFF : Active Sense : Reset	X O X X	X O O X	
Remarks	*2: For details, see MIDI Implementation at http://world.casio.com/. *2: Si desea más información, vea Implementación MIDI en http://world.casio.com/. *3: This Instrument treats a hall simulator as a reverb. *3: Este instrumento considera al simulador de salas como una reverberación.		

Mode 1 : OMNI ON, POLY Mode 2 : OMNI ON, MONO O : Yes
Mode 3 : OMNI OFF, POLY Mode 4 : OMNI OFF, MONO X : No

This recycle mark indicates that the packaging conforms to the environmental protection legislation in Germany.

Esta marca de reciclaje indica que el empaquetado se ajusta a la legislación de protección ambiental en Alemania.

CASIO®

C MA1306-A Printed in China

PXA800-ES-1A

CASIO COMPUTER CO., LTD.
6-2, Hon-machi 1-chome
Shibuya-ku, Tokyo 151-8543, Japan

© 2013 CASIO COMPUTER CO., LTD.